531-70I TELEHANDLER

3T DIESEL TELEHANDLER INDUSTRIAL (7M)

STATIC DIMENSIONS

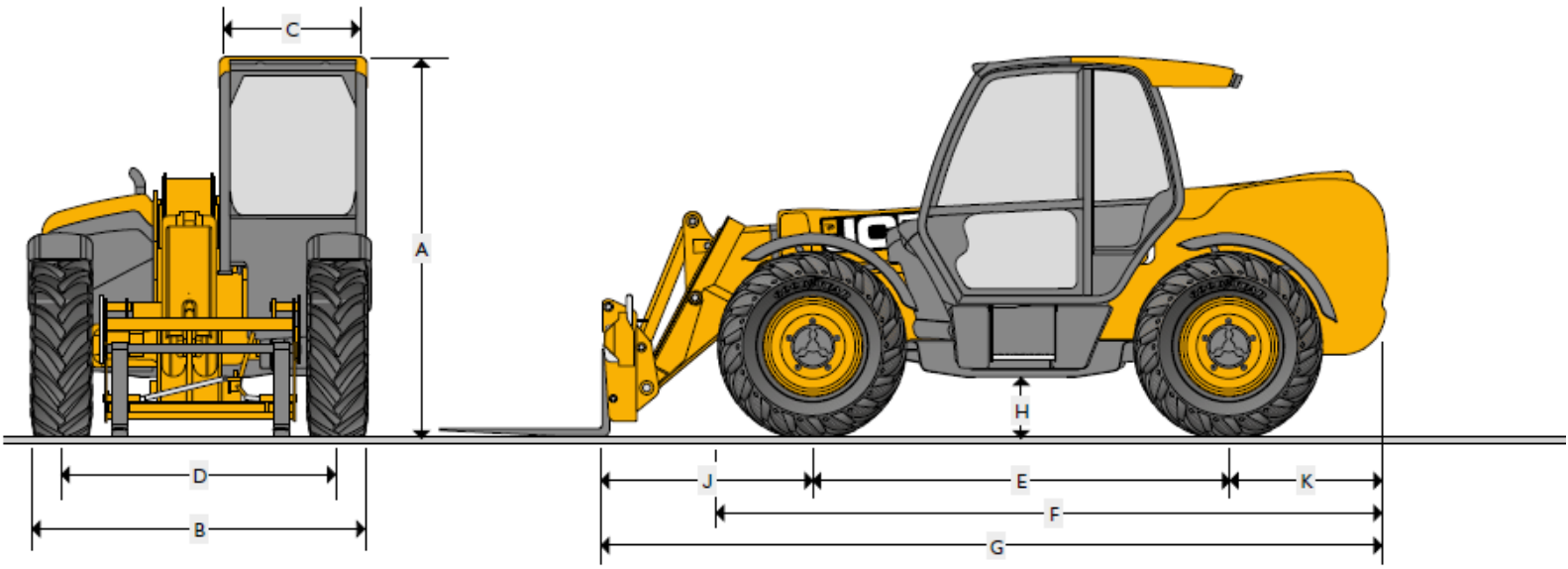

STATIC DIMENSIONS

	Machine model		531-70	541-70	535-95	533-105	535-125 HiViz
A	Overall height	m	2.49	2.49	2.49	2.49	2.59
B	Overall width (over tyres)*	m	2.23	2.23	2.36	2.36	2.35
C	Inside width of cab	m	0.94	0.94	0.94	0.94	0.94
D	Front track	m	1.81	1.81	1.87	1.87	1.90
E	Wheelbase	m	2.75	2.75	2.75	2.75	2.75
F	Overall length to front tyres	m	4.38	4.38	4.38	4.38	4.74
G	Overall length to front carriage	m	4.99	4.99	4.99	5.38	5.80
H	Ground clearance	m	0.40	0.40	0.40	0.40	0.40
J	Front wheel centre to carriage	m	1.25	1.25	1.20	1.62	1.68
K	Rear wheel centre to rear face	m	0.99	0.99	1.04	1.01	1.37
	Overall width with stabilisers fully deployed	m	NA	NA	NA	2.63	2.57
	Outside turn radius (over tyres)	m	3.7	3.7	3.7	3.7	3.75
	Carriage rollback angle	degrees	42.6	42.6	41.0	41.2	37.0
	Carriage dump angle	degrees	37.5	37.5	24.0	24.0	12.5
	Weight	kg	7060	7850	8215	8850	10066
	Tyres		15.5/80-24	15.5/80-24	15.5/80-24	15.5/80-24	15.5/80-24

* Type dependent

Disclaimer: Specifications are indicative only and may vary between model years or individual units. For equipment hire, we will supply the same or an equivalent model that is fit for the disclosed purpose.

531-70I TELEHANDLER

3T DIESEL TELEHANDLER INDUSTRIAL (7M)

LIFT PERFORMANCE

		531-70	541-70
		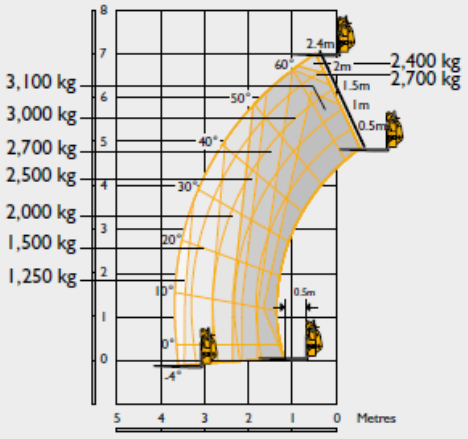	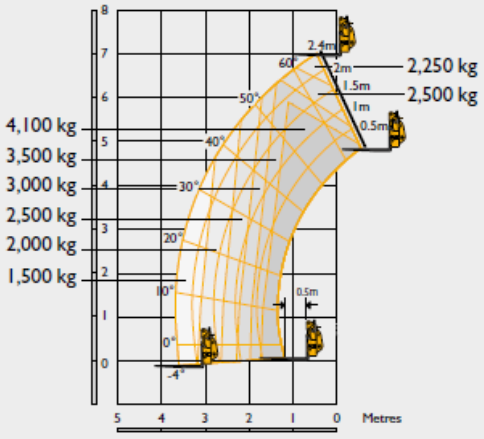
Maximum lift capacity	kg	3100	4100
Lift capacity to full height	kg	2400	2250
Lift capacity at full reach	kg	1250	1500
Lift height	m	7.0	7.0
Reach at maximum lift height	m	0.54	0.54
Maximum forward reach	m	3.7	3.7
Reach with 1 tonne load	m	3.7	3.7
Placing height	m	6.3	6.3

Complies with stability test EN 1459 Annex B. Chassis Levelling (Sway) with stabilisers retracted (Sway angle ±9°).

Disclaimer: Specifications are indicative only and may vary between model years or individual units. For equipment hire, we will supply the same or an equivalent model that is fit for the disclosed purpose.