340AJ BOOM LIFT

34FT DIESEL BOOM LIFT ARTICULATED

Performance

Platform Height	33 ft 10.5 in.	10.33 m
Horizontal Outreach	19 ft 11 in.	6.06 m
Up and Over Height	17 ft	5.17 m
Swing	355 Degrees Non-Continuous	
Platform Capacity	500 lb	227 kg
Platform Size	30 x 60 in.	0.76 x 1.52 m
Platform Rotator	180 Degrees Hydraulic	
Jib	4 ft	1.22 m
Range of Articulation	144 Degrees (+84, -60)	
Weight	9,700 lb	4,400 kg
Max. Ground Bearing Pressure	64 psi	4.5 kg/cm²
Drive Speed		
4WD	3.1 mph	4.98 km/hr
Tilt Cut Out	3 Degrees	
Gradeability		
4WD	45%	
Turning Radius		
Inside	5 ft	1.52 m
Outside	13 ft	3.96 m

Standard Specifications

Engine

Make and Model		
Dual Fuel Engine		
PSI/GM	28.7 hp	21.4 kW
Diesel Engine		
Kubota D1105	24.8 hp	18.5 kW
Fuel Tank Capacity	13 gal.	49.21 L

Tires

Standard	265/50D20 Foam Filled Lug Tread

Hydraulic System

Capacity	20.6 gal.	77.9 L
Auxiliary Power	12V DC	



Standard Features

- 4 ft (1.22 m) Articulating Jib
- 355 Degree Non-Continuous Swing
- Platform 30 x 60 in. (0.76 x 1.22 m) Side Entry
- 180 Degree Hydraulic Platform Rotator
- Platform Console Machine Status Light Panel*
- 110V-AC Receptacle in Platform
- 3 Degree Tilt Alarm/Indicator Light
- Swing-Out Engine Tray
- Gull-Wing Steel Turntable Hoods
- 12V-DC Auxiliary Power
- Hourmeter
- Hydrostatic Drive
- Proportional Controls
- Control ADE® System
- Lifting/Tie Down Lugs
- Horn
- Oscillating Axle
- Cast Aluminum Control Box
- All Motion Alarm
- Glow Plugs (Diesel Engines)
- Load Sensing System
- SkyGuard SkyLine™

*Provides indicator lights at platform control console for system distress, low fuel, 5 degree tilt light, and foot switch status.

Accessories & Options

- 30 x 48 in. (0.76 x 1.22 m) Platform
- Self-Closing Gate
- 1/2 in. Air Line to Platform
- AC Generator
- 43.5 lb (19.7 kg) Propane Tank
- Cold Weather Start Kit[1]
- Hostile Environment Kit[2]
- Flashing Amber Beacon
- Arctic Package[3] (diesel only)
- Special Hydraulic Oils
- Light Package[4]

1. Includes engine block heater, battery heater, oil tank heater.
2. Includes console cover, boom wipers and cylinder bellows.
3. Includes arctic hydraulic hoses (drive and steer only) and main boom cable, arctic hydraulic oil, extreme cold engine oil, anti-freeze (Cat only), fuel conditioner, engine block heater, battery blanket, glow plugs, hydraulic tank heater, and oversized footswitch.
4. Includes platform work lights, head and tail lights, amber beacon.

Additional accessories and options available via JLG Aftermarket.

Disclaimer: Specifications are indicative only and may vary between model years or individual units. For equipment hire, we will supply the same or an equivalent model that is fit for the disclosed purpose.

340AJ BOOM LIFT

34FT DIESEL BOOM LIFT ARTICULATED

Dimensions

All dimensions are approximate.

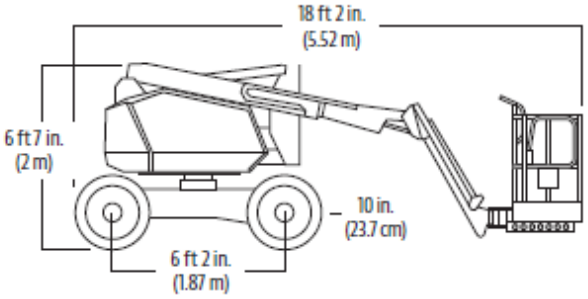

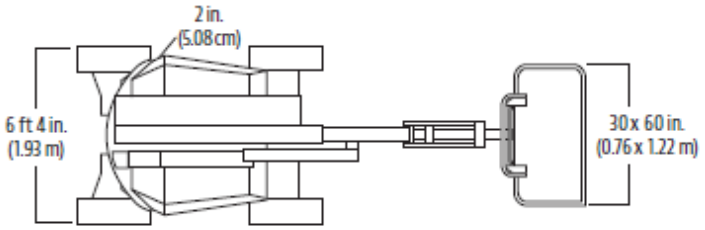

Reach Diagram

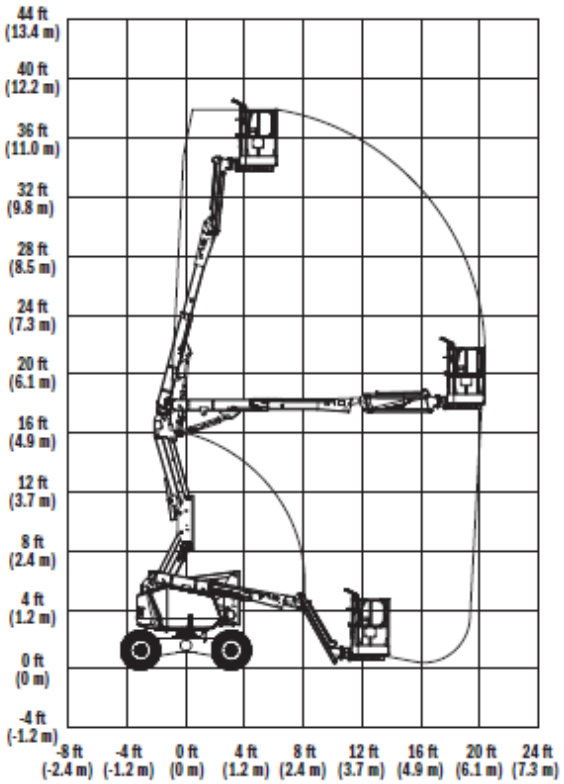

Disclaimer: Specifications are indicative only and may vary between model years or individual units. For equipment hire, we will supply the same or an equivalent model that is fit for the disclosed purpose.