PB1890 BOOM LIFT

51FT DIESEL BOOM LIFT SPIDER

Max working height	**17.60 m**
Max working height in narrow set	N/A
Max horizontal outreach	**8.70 m**
Max SWL	200 kg
Weight: Engine + 240V	**2457 kg (2530 kg Pro)**
: Engine + Batteries	2620 kg (2683 kg Pro)
Turret rotation	360 °
Basket rotation	140 °
Ground pressure driving (approx)	47 kN/m2
Max stabiliser force	17.4 kN
Max stabiliser pressure (std foot pad)	478 kN/m2
Traffic load (live load) travelling	3.73 kN/m2
Traffic load (live load) stabilised wide	2.28 kN/m2
Traffic load (live load) stabilised narrow	N/A
Auto levelling	Optional (Std on Pro)
Max slope for stabilisers (no extra pads)	14 °
Gradeability lengthwise	27 °
Gradeability sideways	15 °
Standard power source	Honda 13 Hp Petrol
Optional power source	Kubota 14 Hp Diesel (Std on Pro)
Dual power options	240V Electric or Batteries
Expanding tracks	Std
Drive Speed	1.5 km/h (2.5km/h Pro)
Radio control	Optional (Std on Pro)
Electric emergency lowering	Optional

(All specs E&OE and subject to change)

Disclaimer: Specifications are indicative only and may vary between model years or individual units. For equipment hire, we will supply the same or an equivalent model that is fit for the disclosed purpose.

PB1890 BOOM LIFT

51FT DIESEL BOOM LIFT SPIDER

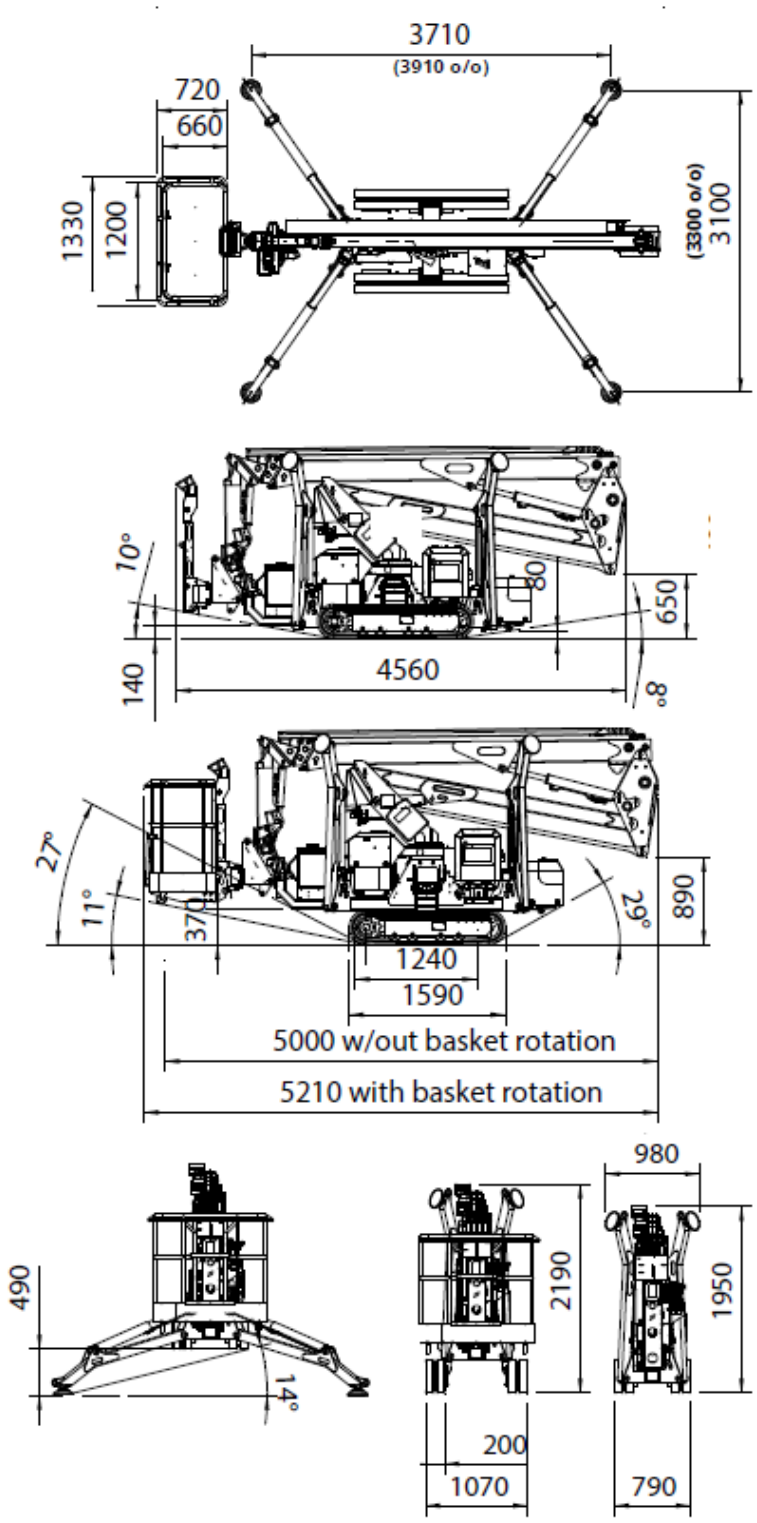

Disclaimer: Specifications are indicative only and may vary between model years or individual units. For equipment hire, we will supply the same or an equivalent model that is fit for the disclosed purpose.

PB1890 BOOM LIFT

51FT DIESEL BOOM LIFT SPIDER

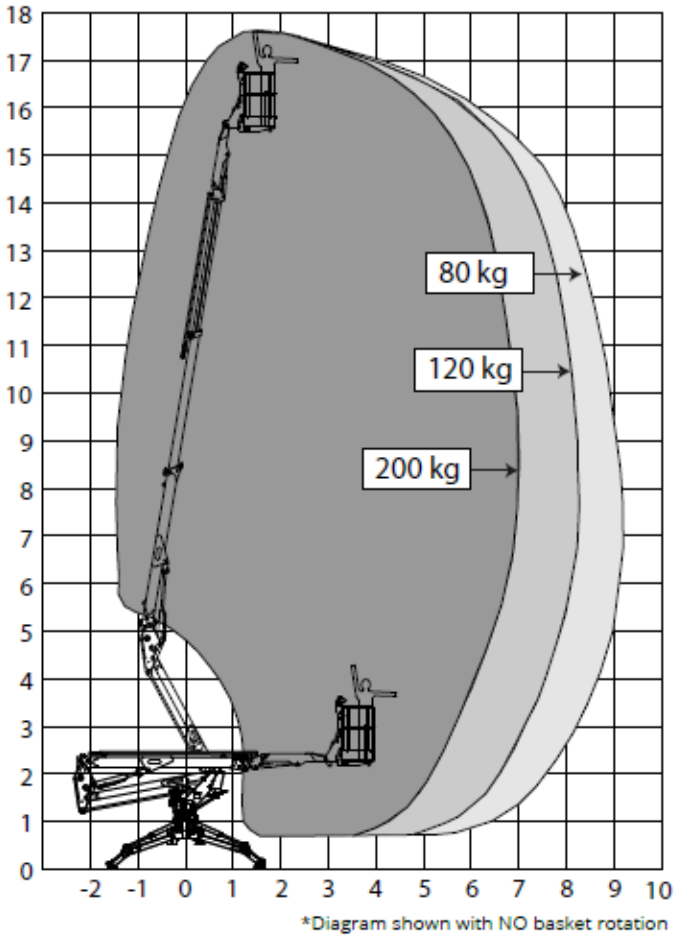

*Diagram shown with NO basket rotation



Disclaimer: Specifications are indicative only and may vary between model years or individual units. For equipment hire, we will supply the same or an equivalent model that is fit for the disclosed purpose.