P40.7 TELEHANDLER

4.0T DIESEL TELEHANDLER INDUSTRIAL (7.0M)

KEY SPECIFICATIONS	
Total weight unladen with forks (kg)	7250
Maximum load capacity (kg)	4000
Maximum lift height (m)	6.90
Maximum forward reach (m)	3.70
Lift height at maximum capacity (m)	4.7
Forward reach at maximum load capacity (m)	1.3
Load capacity at maximum height (kg)	2750
Load capacity at maximum forward reach (kg)	1200
Engine (make/number of cylinders)	Deutz/4
Tier 3 engine power (kW/hp)	103/140
Fuel capacity (l)	150
Maximum speed (kph)	40
Load -sensing hydraulic pump (bar-l/min)	210-135
Hydraulic oil capacity (l)	105
Electrical circuit (V)	12
Battery (Ah)	100
Cab compliant with ROPS/FOPS standards	✔
4x1 Electro Mechanical joystick controls	✔
Tac-Lock hydraulic attachment coupling	✔
Auxiliary boom hydraulics	✔
Two standard forks (1200mm)	✔
Hydrostatic transmission	✔
Finger touch direction control	✔
Inching pedal for precise control	✔
Permanent 4 wheel drive	✔
Four wheel steering	✔
Dry type disc brakes on all wheels	✔
Automatically locking parking brake	✔
405/70-24 tyres	✔
Rear differential lock (optional)	✔
Four cab working lights (2f & 2r)	✔
12V electrical on boom head	✔
Air suspension seat	✔
Front window protection	✔
Full size cab with air conditioning	✔
Stability control system	✔

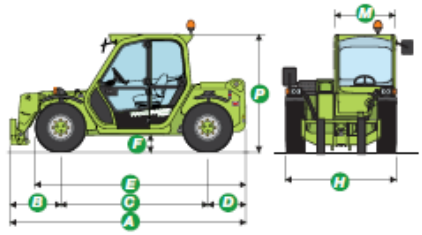

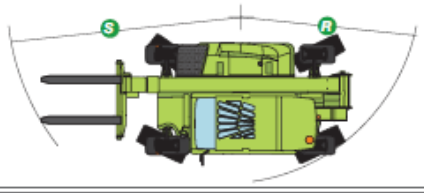

DIMENSIONS	
A (mm)	4180
B (mm)	905
C (mm)	2700
D (mm)	570
E (mm)	3865
F (mm)	565
H (mm)	2230
M (mm)	995
P (mm)	2475
R (mm)	3985
S (mm)	4670

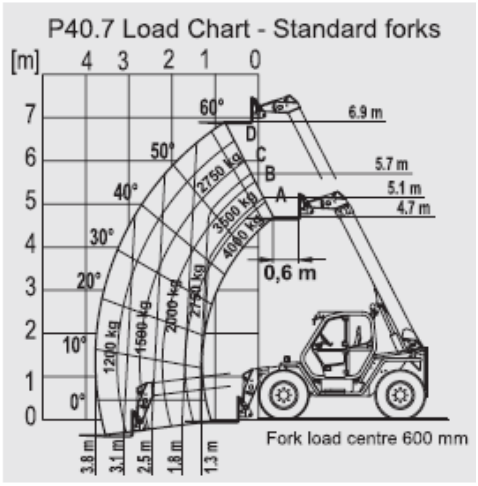

The Merlo TurboFarmer 40.7 is designed for exactly what is needed when traditional handling methods can't get the job done. A tough reliable tool, easy to use and versatile. The Merlo design gives the advantage of bigger performance in a smaller lighter machine with added flexibility. Their key features are safety, productivity and manoeuvrability. For added productivity, a large range of optional attachments including buckets, crane hooks, winches, jibs and bale handlers add to the versatility of the P40.7. Due to the flexibility and versatility of telehandlers they are usually operational for more hours, giving a higher rate of return, and reduce the need for other machines such as forklifts or front end tractors. The Merlo P40.7 can move 4000 kg, lift up to 7 m height and travel up to 40 kmh, with the extra benefits of a full size comfort cab. The 3 mode steering adds to the ease of operation. You benefit from easy to use versatile equipment, an increase in efficiency and productivity, and the safest telehandler with 50 years of specialist experience.

Merlo reserves the right to modify and update the contents of this document at any time. Information and technical data are as available at time of printing.
For current information on Merlo products please contact your Merlo dealer. ABN 87116110751 P40.7B ver2.19.6

Disclaimer: Specifications are indicative only and may vary between model years or individual units. For equipment hire, we will supply the same or an equivalent model that is fit for the disclosed purpose.