540-140 TELEHANDLER

4.0T DIESEL TELEHANDLER INDUSTRIAL (14.0M)

STATIC DIMENSIONS

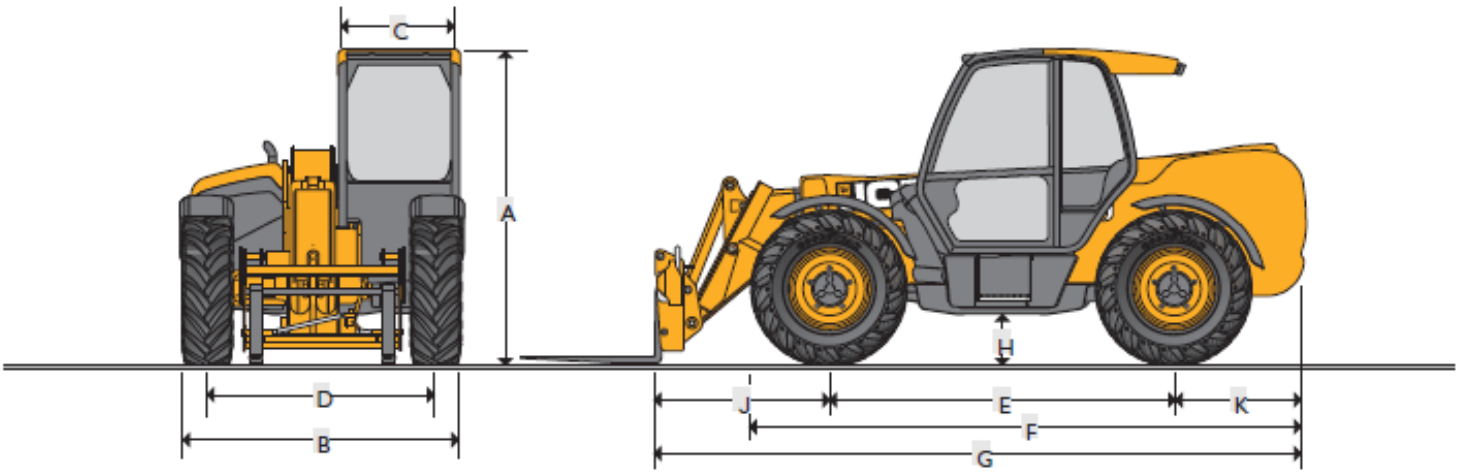

STATIC DIMENSIONS

	Machine model		540-140 HiViz	540-170	540-180 HiViz	540-200
A	Overall height	m	2.59	2.69	2.59	2.72
B	Overall width (over tyres)*	m	2.35	2.44	2.35	2.44
C	Inside width of cab	m	0.94	0.94	0.94	0.94
D	Front track	m	1.90	1.90	1.90	1.97
E	Wheelbase	m	2.75	2.75	2.75	2.75
F	Overall length to front tyres	m	4.74	5.08	4.75	5.09
G	Overall length to front carriage	m	6.23	6.36	6.27	6.81
H	Ground clearance	m	0.40	0.40	0.40	0.41
J	Front wheel centre to carriage	m	2.11	1.94	2.15	2.39
K	Rear wheel centre to rear face	m	1.37	1.67	1.37	1.67
	Overall width with stabilisers fully deployed	m	2.57	3.55	3.39	3.82
	Outside turn radius (over tyres)	m	3.75	4.10	3.75	4.1
	Carriage rollback angle	degrees	37.0	39	36.50	39
	Carriage dump angle	degrees	12.5	8.8	12.50	8.8
	Weight	kg	10880	12060	11380	12985
	Tyres		15.5/80-24	15.5/80-24	15.5-25	17.5-25

* Type dependent

Disclaimer: Specifications are indicative only and may vary between model years or individual units. For equipment hire, we will supply the same or an equivalent model that is fit for the disclosed purpose.

540-140 TELEHANDLER

4.0T DIESEL TELEHANDLER INDUSTRIAL (14.0M)

LIFT PERFORMANCE

		540-140 HiViz Stabilisers retracted Sway	540-140 HiViz Stabilisers extended Sway
		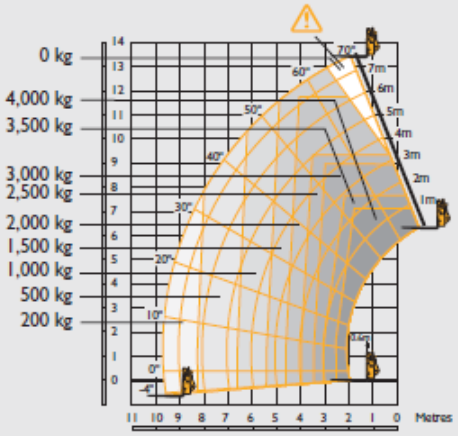	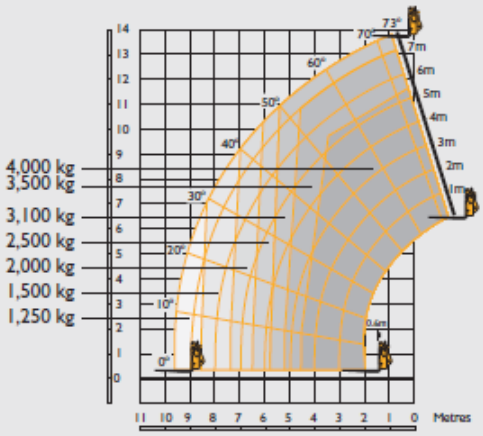
Maximum lift capacity	kg	4000	4000
Lift capacity to full height	kg	1300	3100
Lift capacity at full reach	kg	200	900
Lift height	m	12.89	13.78
Reach at maximum lift height	m	3.09	1.01
Maximum forward reach	m	9.70	9.64
Reach with 1 tonne load	m	6.61	9.64
Placing height	m	12.40	13.30

Complies with stability test EN 1459 Annex B. Chassis Levelling (Sway) with stabilisers retracted (Sway angle ±9°).

Disclaimer: Specifications are indicative only and may vary between model years or individual units. For equipment hire, we will supply the same or an equivalent model that is fit for the disclosed purpose.