2646ES SCISSOR LIFT

26FT ELECTRIC SCISSOR LIFT WIDE DECK

Performance

Platform Height–Elevated	
1930ES	5.72 m
2032ES	6.10 m
2632ES	7.77 m
2646ES	7.92 m
3246ES	9.68 m
Platform Capacity	
1930ES	230 kg
2032ES	360 kg
2632ES	230/360 kg
2646ES	450 kg
3246ES	320/450 kg
Capacity on Platform Extension	120 kg
Lift/Lower Time	
1930ES	26/30 seconds
2032ES	28/40 seconds
2632ES	33/37 seconds
2646ES	41/50 seconds
3246ES	55/62 seconds
Maximum Drive Height	Fully Elevated
Weight*	
1930ES	1,575 kg
2032ES	2,000 kg
2632ES	2,145 kg
2646ES	2,765 kg
3246ES	2,940 kg
Drive Speed–Elevated	0.8 km/h
Drive Speed–Lowered	
1930ES	4.82 km/h
2032ES/ 2632ES	4.43 km/h
2646ES/ 3246ES	4.00 km/h
Gradeability	25%
Turning Radius (Inside)	Zero
Turning Radius (Outside)	
1930ES	1.75 m
2032ES/ 2632ES	2.06 m
2646ES/ 3246ES	2.41 m

* Certain options or country standards will increase weight.



Standard Specifications

Power Source

Batteries	4x6V 220 amp-hr	
Charger	20 Amp Automatic	
Drive	24V Electric	8hp

Hydraulic Reservoir

- Capacity

1930ES/2032ES/2632ES	4.73 L
2646ES/3246ES	6.4 L

- Pump: Fixed Displacement Gear

Tyres

- Tyre Size/Type

1930ES	12.5 x 4 in. Non-Marking Solid
2032ES/2632ES/2646ES/3246ES	16 x 5 in. Non-Marking Solid

Brakes

- Electric/Friction

Standard Features

- Proportional Controls
- Industry Leading Duty Cycles
- Self Closing and Locking Gate
- Battery Condition Indicator
- Fold-Down Guard Rails[1]
- Slide-Out Battery Trays
- Automatic Traction Control (ATC)
- All Motion Alarm
- 20 Amp Automatic SCR Charger
- Horn
- Hourmeter
- Manual Descent Pull Cable
- Tilt Alarm and Light
- Moveable, Removable Platform Control
- Powder-Coated
- Console with Rail Mounting Bracket
- Nickel Plated Pins
- Lubrication Free Scissor Arm Bushings
- Scissor Maintenance Prop
- Mechanised Pothole Protection
- Machine Tie Downs
- Fork Lift Pockets, Lift from Side and Rear
- Flashing Amber Beacon
- Load Sensing System
- Lifting Lugs

Accessories & Options

- AC Outlet in Platform
- White Noise (squawker) Motion Alarm
- AGM Batteries
- Airline to Platform
- Special Hydraulic Oils
- Accessory Packages:
  - Electrician's Package
  - Plumber's Package
  - JLG® Workstation
  - Panel Carrier Accessory[1]
  - Pipe Rack Accessory[1]
  - Plant Maintenance Package

Disclaimer: Specifications are indicative only and may vary between model years or individual units. For equipment hire, we will supply the same or an equivalent model that is fit for the disclosed purpose.

2646ES SCISSOR LIFT

26FT ELECTRIC SCISSOR LIFT WIDE DECK

Dimensions

All dimensions are approximate.

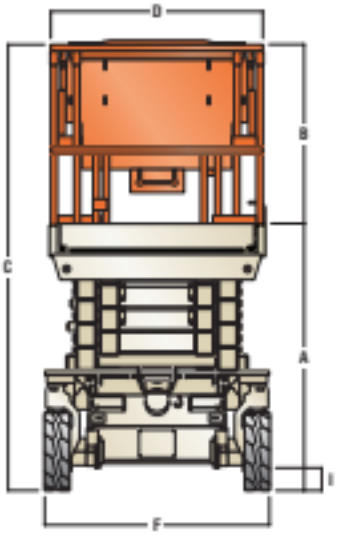

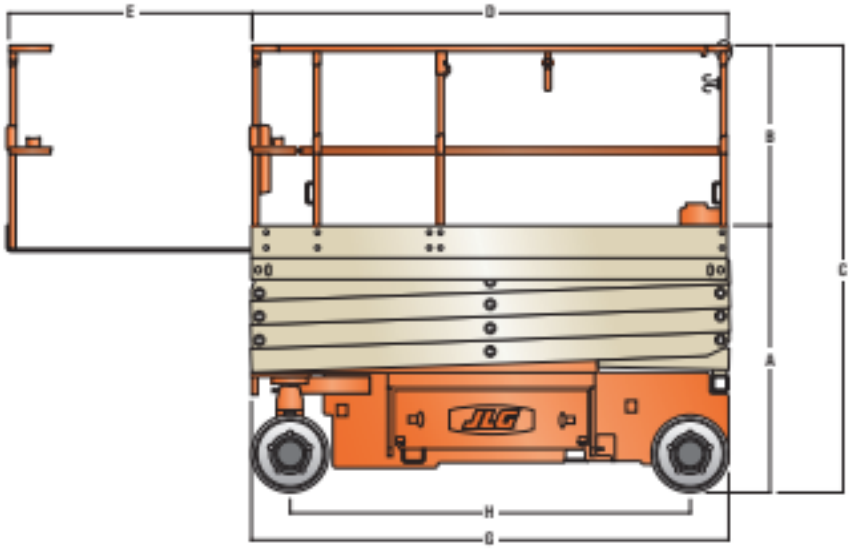

A. Platform Height–Lowered	
1930ES	0.86 m
2032ES	1.10 m
2632ES	1.23 m
2646ES	1.26 m
3246ES	1.26 m
B. Platform Railing Height	
ES Series	1.14 m
C. Overall Height–Rails Lowered	
1930ES	N/A
2032ES	1.80 m
2632ES	1.94 m
2646ES/3246ES	1.97 m
D. Platform Size	
1930ES	0.76 x 1.87 m
2032ES/2632ES	0.76 x 2.3 m
2646ES/3246ES	1.12 x 2.5 m

E. Platform Extension	
1930ES/2032ES/2632ES	0.9 m
2646ES/3246ES	1.27 m
F. Overall Width	
1930ES	76 cm
2032ES/2632ES	81 cm
2646ES/3246ES	1.17 m
G. Overall Length	
1930ES	1.87 m
2032ES/2632ES	2.3 m
2646ES/3246ES	2.5 m
H. Wheelbase	
1930ES	1.6 m
2032ES/2632ES	1.88 m
2646ES/3246ES	2.09 m
I. Ground Clearance	
1930ES/2032ES/2632ES	8.8 cm
2646ES/3246ES	12.7 cm

Disclaimer: Specifications are indicative only and may vary between model years or individual units. For equipment hire, we will supply the same or an equivalent model that is fit for the disclosed purpose.