X13JP-D BOOM LIFT

37FT DIESEL BOOM LIFT SPIDER

MORE ECONOMIC
- Minimal emissions and noise pollution.

MORE PRODUCTIVE
- Reduce your set-up time with auto-levelling outriggers.

MORE ACCESS
- Equipped with track drive for easy manoeuvrability in sensitive environments.

SMART DESIGN
- Low weight for ease of transportation and operation in weight restricted areas.



Standard Features

- 0.60 m x 1.31 m Aluminium 2 person platform
- Slide bar rear entry
- Footswitch
- Full proportional control
- Articulating jib
- Remote Control (via cable to platform)
- Full Remote Control of drive and stabilization
- Multi-lingual LCD display on platform console
- Platform console position sensor and lock
- Envelope management load sensing system
- Platform designed for ease of removal/ changeover with casters
- AC Cable to platform
- 6.5 mm Airline to platform
- 12.6 mm Waterline to platform
- Engine protection
- Rubber Outrigger Pads
- Cylinder Rod Protection on Outriggers
- Automatic cut-out when out of level
- Powered track extensions/retraction
- 360° non-continuous turntable rotation
- Turntable alignment sensor and gauge
- Three emergency descent systems
- Electro-hydraulic controls
- Full pressure hydraulic controls
- Lifting/Tie down points
- Forklift Pockets

Standard Specifications

Power Source	
• AC electric motor	2.2 KW 50Hz 230V
• HONDA iGX 390	8.7 Kw Petrol
• Hydraulic oil tank capacity	24 L
Tracks	
• Standard	1.24 m x 0.18 m x 0.30 m Low Profile Non Mark Rubber Tracks

Accessories & Options

- 100Ah 36V Lithium Ion power pack
- 1.24 m x 0.18 m x 0.30 m Low Profile Black Rubber Tracks
- Hatz 1B40 7.5 kW (10 HP) at 3600RPM Diesel Engine
- 110V, 50Hz – 2.2 kW Electric Engine
- 2nd (high) Drive speed Automatic Shift Gears
- 0.60 m x 0.78 m Aluminium single person platform
- Special paint colour

Disclaimer: Specifications are indicative only and may vary between model years or individual units. For equipment hire, we will supply the same or an equivalent model that is fit for the disclosed purpose.

X13JP-D BOOM LIFT

37FT DIESEL BOOM LIFT SPIDER

Performance

• Working Height	13.30 m
• Working Outreach	7.08 m
• Platform capacity	🧍🧍/230 kg
• Up & Over Height	4.90 m
• Swing (non continuous)	360°
• Jib - overall length	1.68 m
• Jib - range of articulation	89° (+0/-89°)
• Platform size (standard 2 persons)	0.60 m x 1.31 m
• Platform size (narrow one person)	0.60 m x 0.78 m
• Stowed width (with std. 2P platform)	1.31 m
• Dimensions:	
A. Stowed width (without platform)	0.79 m
B. Stowed height (on tracks)	1.99 m
C^1. Stowed length (on tracks) with Basket	3.90 m
C^2 Stowed length (on tracks) without Basket	3.28 m
D. Outrigger footprint	2.80 x 2.80 m
• Machine weight (with standard platform)	2,185 kg [1]
• Maximum ground bearing pressure (on outriggers)	2.41 kg/cm²
• Maximum drive speed (single speed m/c) Petrol	1.4 km/h
• Maximum drive speed (two speed m/c) Petrol	2.6 km/h
• Gradeability	28,7%
• Max. Approach / Depart angles	Front 20° / Rear 23°
• Width of Undercarriage (Retracted/Extended)	0.75 m / 1.10 m (optional widening undercarriage)
• Basket rotation	124° (+/-62°)



[1] Certain options or country standards may increase weight and/or dimensions

Reach Diagram

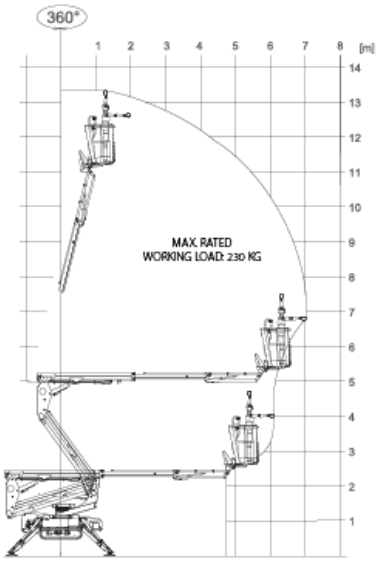

Dimensions

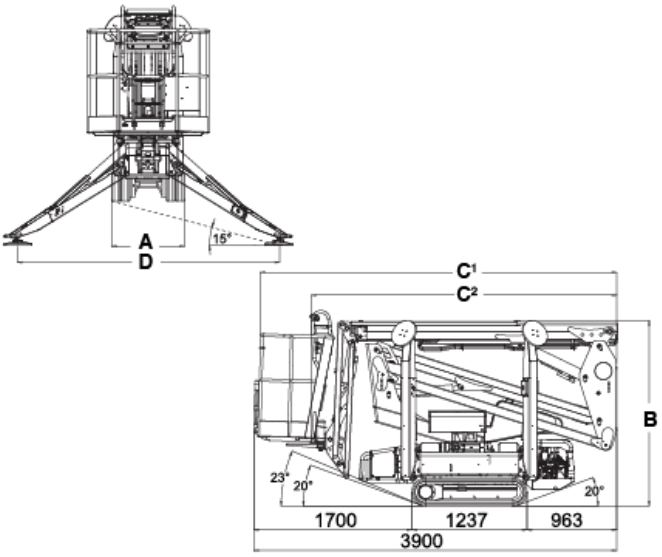

Disclaimer: Specifications are indicative only and may vary between model years or individual units. For equipment hire, we will supply the same or an equivalent model that is fit for the disclosed purpose.