X17JP-L BOOM LIFT

49FT LITHIUM BOOM LIFT SPIDER

Performance

Working Height	16.96 m
Platform Height	14.96 m
Working Outreach	7.65 m
Up and Over Height	7.80 m
Swing	360° (Non-continuous)
Jib - Overall Length	1.68 m
Jib - Range of Articulation (+/-)	89° (+0/-89°)
Platform Capacity (unrestricted)	230 kg
Platform Size	0.69 m x 1.34 m
Stowed Width	1.48 m
Machine Weight*	2,230 kg
Gradeability	28%
Maximum Operating Slope	16°
Maximum Approach/Depart Angles	20°
Width of Undercarriage (Retracted/Extended)	0.79 m/1.09 m

*Certain options will increase weight.



Standard Specifications

Power Source

Petrol	Petrol Engine Honda iGX390 11.7 kW AC Electric Motor 230V, 50 Hz, 2.2 kW
Diesel	Diesel Engine Hatz 1B40 7.5 kW, 10 hp AC Electric Motor 230V, 50 Hz, 2.2 kW
Battery	100 AH, 48V Electric engine with lithium battery package, including battery charger

Tyres

• Low Profile Non-marking Rubber Tracks	1.24 m x 0.18 m x 0.30 m

Standard Features

- SkyGuard® Enhanced Control Panel Protection
- 0.69 m x 1.34 m Aluminium Two-person Platform
- Slide Bar Rear Entry
- Footswitch
- Full Proportional Control
- Articulating Jib
- Powered Platform Rotator (124°)
- Remote Control (Via Cable to Platform)
- Full Remote Control of Drive and Stabilization
- Multi-lingual LCD Display on Platform Console
- Platform Console Position Sensor and Lock
- Envelope Management Load Sensing System
- Platform Designed for Ease of Removal/Changeover
- 6.5 mm Air Line to Platform
- Engine Protection
- Rubber Outrigger Pads
- Cylinder Rod Protection on Outriggers
- Automatic Cut-out When Out of Level
- Powered Track Extension/Retraction
- 360° Non-continuous Turntable Rotation
- Turntable Alignment Sensor and Gauge
- Three Emergency Descent Systems
- Electro-hydraulic Controls
- Full Pressure Hydraulic Controls
- 2nd Drive Speed (High)
- Lifting/Tie Down Points
- Forklift Pockets

Accessories & Options

- AC Outlet to Platform, Including ELCB
- Fire Extinguisher

Disclaimer: Specifications are indicative only and may vary between model years or individual units. For equipment hire, we will supply the same or an equivalent model that is fit for the disclosed purpose.

X17JP-L BOOM LIFT

49FT LITHIUM BOOM LIFT SPIDER

Dimensions

All dimensions are approximate.

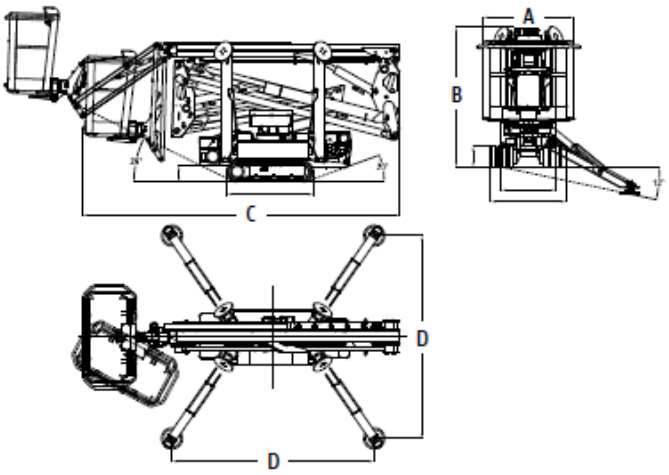

A. Stowed width (without platform):	0.80 m
B. Stowed height (on tracks):	2.00 m
C. Stowed length (on tracks):	4.53 m
D. Outrigger footprint:	2.89 m x 2.88 m

Reach Diagram

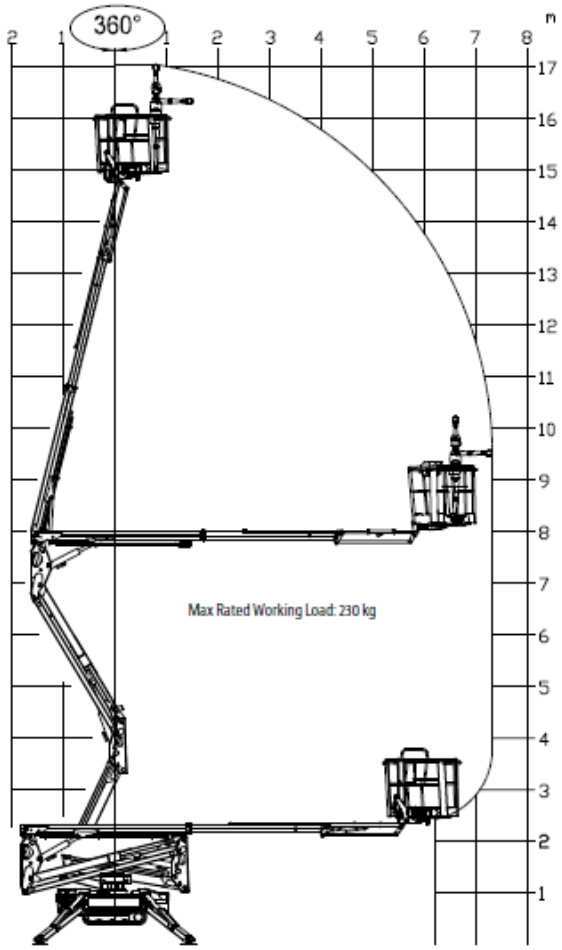

Disclaimer: Specifications are indicative only and may vary between model years or individual units. For equipment hire, we will supply the same or an equivalent model that is fit for the disclosed purpose.