GS2032 SCISSOR LIFT

20FT ELECTRIC SCISSOR LIFT NARROW

Models	GS-2032		GS-2046 E-Drive	
Measurements	**US**	**Metric**	**US**	**Metric**
Working height max. - indoor[1]	26 ft 1 in	8.13 m	26 ft 1 in	8.13 m
Working height max. - outdoor[1]	22 ft	6.88 m	22 ft 4 in	6.98 m
A Platform height max. - indoor	20 ft 1 in	6.13 m	20 ft 1 in	6.13 m
A Platform height max. - outdoor	16 ft	4.88 m	16 ft 4 in	4.98 m
B Platform height - stowed	3 ft 6 in	1.07 m	3 ft 6 in	1.07 m
C Platform length - outside	7 ft 5 in	2.26 m	7 ft 5 in	2.26 m
C Platform length - outside, extended	10 ft 5 in	3.18 m	10 ft 5 in	3.18 m
Slide-out platform extension deck - length	3 ft	0.91 m	3 ft	0.91 m
D Platform width - outside	2 ft 8 in	0.81 m	3 ft 9.5 in	1.16 m
Guardrail height	3 ft 7 in	1.10 m	3 ft 7 in	1.10 m
Toeboard height	6 in	15 cm	6 in	15 cm
E Height - stowed (folding rails)	7 ft 2 in	2.18 m	7 ft 2 in	2.18 m
E Height - stowed (rails lowered)	5 ft 11 in	1.80 m	5 ft 2 in	1.57 m
F Length machine - stowed	8 ft	2.44 m	8 ft	2.44 m
F Length machine - stowed, extended	10 ft 11 in	3.33 m	10 ft 11 in	3.33 m
G Width	2 ft 8 in	0.81 m	3 ft 10 in	1.16 m
H Wheelbase	6 ft 1 in	1.85 m	6 ft 1 in	1.85 m
I Ground clearance (center) - pothole guards retracted	5 in	12 cm	5 in	12 cm
I Ground clearance - pothole guards deployed	0.9 in	2.30 cm	0.9 in	2.30 cm
Productivity				
Maximum platform occupancy (in/out)	2/1	2/1	2/1	2/1
Lift capacity	800 lb	363 kg	1,200 lb	544 kg
Lift capacity - extension deck extended	250 lb	113 kg	250 lb	113 kg
Max. platform drive height	20 ft 1 in	6.13 m	20 ft 1 in	6.13 m
Drive speed - stowed	2.0 mph	3.2 km/h	2.0 mph	3.2 km/h
Drive speed - raised	0.5 mph	0.8 km/h	0.5 mph	0.8 km/h
Gradeability - stowed[2]	30%	30%	25%	25%
Turning radius - inside/outside	0/7 ft	0/2.13 m	0/7 ft 6 in	0/2.29 m
Lifting speed - raise/lower	41/33 sec	41/33 sec	32/26 sec	32/26 sec
Tilt sensor activation (front to back/side to side)	3°/1.5°	3°/1.5°	3°/1.5°	3°/1.5°
Tires - solid non-marking	15×5 in	38×13 cm	15×5 in	38×13 cm
Power				
Power	24 V DC (4×6 V 225 Ah)	24 V DC (4×6 V 225 Ah)	24 V DC (4×6 V 225 Ah)	24 V DC (4×6 V 225 Ah)
Hydraulic tank capacity (E-Drive)	4 gal	15 L	4 gal	15 L
Hydraulic tank capacity (hydraulic drive)	4.5 gal	17 L	-	-
Weight[3] and Floor Loading[4]				
Weight	4,038 lb	1,832 kg	3,913 lb	1,775 kg
Tire load max.	1,692 lb	767 kg	2,017 lb	915 kg
Tire contact pressure	111 psi	766 kPa	139.5 psi	938 kPa
Occupied floor pressure	247 psf	11.82 kPa	183 psf	8.63 kPa
Sound and Vibration Levels				
Sound Pressure level (ground workstation)	<70 dBA	<70 dBA	<70 dBA	<70 dBA
Sound Pressure level (platform workstation)	<70 dBA	<70 dBA	<70 dBA	<70 dBA
Vibrations	<2.5 m/s²	<2.5 m/s²	<2.5 m/s²	<2.5 m/s²

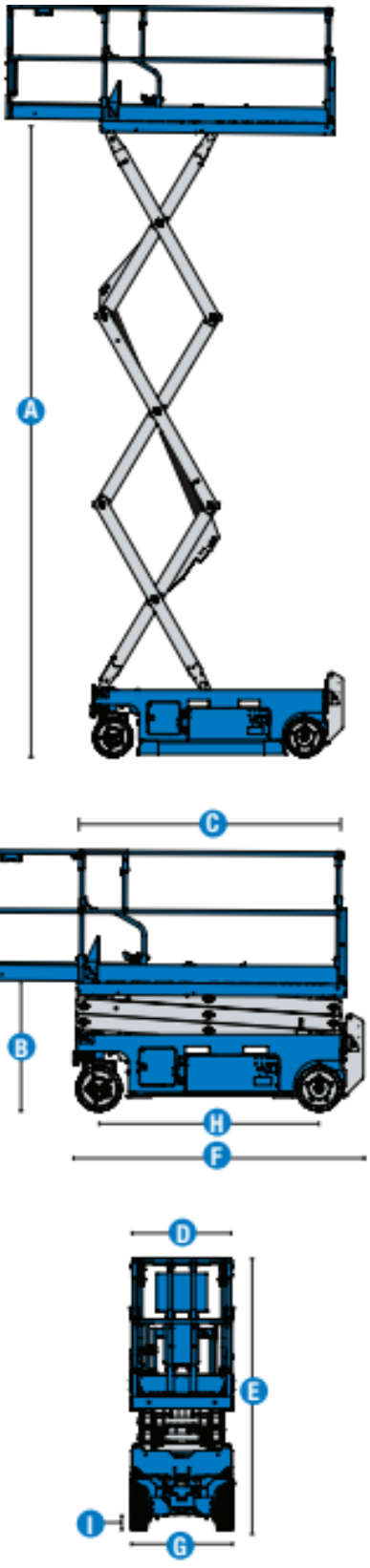

(1) The metric equivalent of working height adds 2 m to platform height. US adds 6 ft to platform height.
(2) Gradeability applies to driving on slopes and may vary depending on options and machine configurations. See operator's manual for details regarding slope ratings.
(3) Weight refers to standard configuration and may vary depending on options and/or country standards.
(4) Floor loading information is approximate and may vary depending on options and machine configurations. It should be used only with adequate safety factors.

Disclaimer: Specifications are indicative only and may vary between model years or individual units. For equipment hire, we will supply the same or an equivalent model that is fit for the disclosed purpose.