800AJ HC3 BOOM LIFT

80FT DIESEL BOOM LIFT ARTICULATED

Performance

Platform Height	24.50 m
Horizontal Outreach	15.90 m
Swing	360 Degrees Continuous
Platform Capacity	
Restricted	340/454 kg
Unrestricted	300 kg
Platform Rotator	180 Degrees Hydraulic
Jib Range of Articulation	130 Degrees (+70, –60)
Weight	17,023 kg
Drive Speed 4WD	4.8 kph
Gradeability 4WD	45%
Tilt Cut Out	5 Degrees
Turning Radius	
Inside	3.12 m
Outside	6.56 m



HC3

3 Capacity Zones - Each rated for 3 occupants + tools/materials

Standard Specifications

Power Source

Engine	Deutz D2011LO4 Tier 4i (49 hp 36.4 kw)
Fuel Tank Capacity	147 L

Hydraulic System

Capacity	151 L
Auxiliary Power	12V DC

Tyres

Non-Marking	18 x 625 Foam Filled

Standard Features

- Oscillating Axle
- 4WD
- Non-Marking Tyres
- Generator including AC Outlets to Platform and ELCB
- 180 Degree Hydraulic Platform Rotator
- 5 Degree Tilt Alarm/Indicator Light
- Swing-Out Engine Tray
- Flashing Amber Beacon
- 12V-DC Auxiliary Power
- Hourmeter
- Horn
- Control ADE® System
- Proportional Controls
- Gull-Wing Engine Hood
- Self-Closing Self-Locking Gate
- LED Light Panel at Platform and Ground Control Consoles
- Status Light Panel*
- Lifting/Tie Down Lugs
- Engine Distress Warning & Shutdown
- All Motion Alarm
- Glow Plugs (Diesel Engines)
- Load Sensing System
- SkyGuard SkyLine
- AS/NZS 1418.10 Compliance

* Provides indicator lights at platform and ground control consoles to show system distress, 5 degree tilt light, and foot switch status.

Accessories & Options

- Platform: 36 x 72 in. (0.91 x 1.83 m)
- Fall Arrest Platform
- SkySense®
- Mesh to Mid Rail
- Fire Extinguisher
- White Noise (Squawker) Alarm
- Pipe Racks
- SkyGlazier

Disclaimer: Specifications are indicative only and may vary between model years or individual units. For equipment hire, we will supply the same or an equivalent model that is fit for the disclosed purpose.

800AJ HC3 BOOM LIFT

80FT DIESEL BOOM LIFT ARTICULATED

Dimensions

All dimensions are approximate.

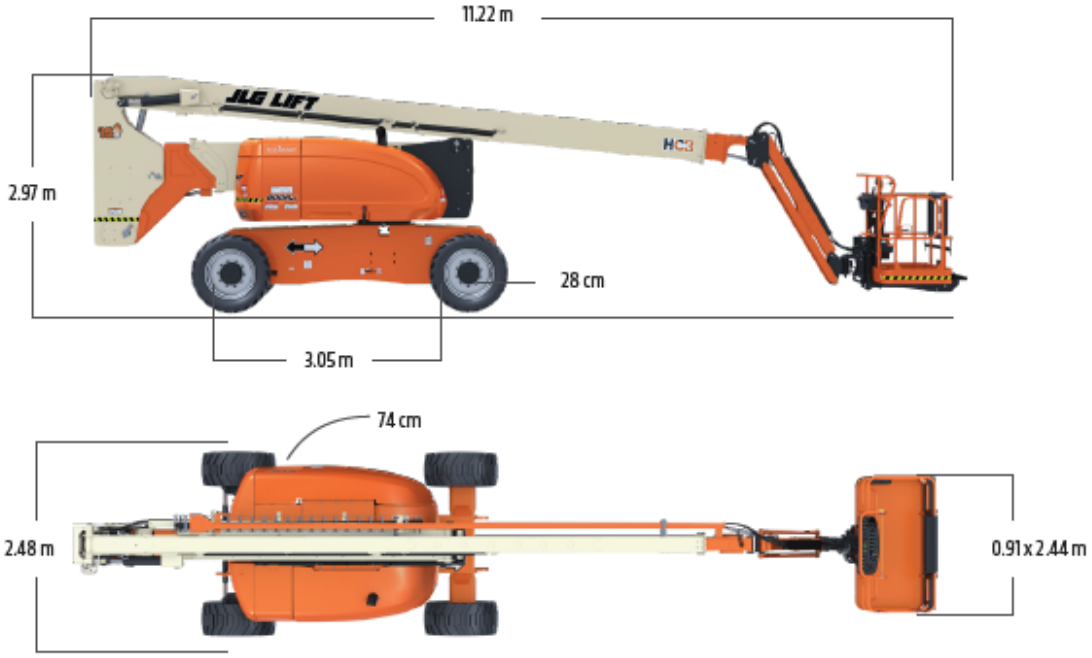

Reach Dimensions

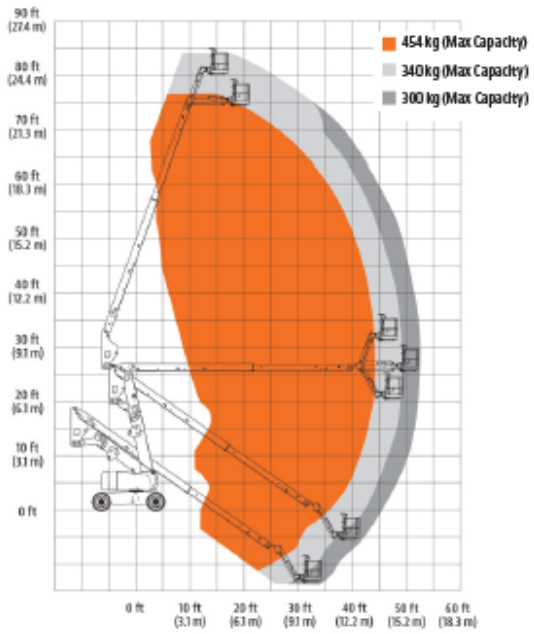

Disclaimer: Specifications are indicative only and may vary between model years or individual units. For equipment hire, we will supply the same or an equivalent model that is fit for the disclosed purpose.