520AJ BOOM LIFT

52FT DIESEL BOOM LIFT ARTICULATED ROUGH TERRAIN WHEELED

MORE ECONOMIC

- Cut fuel consumption and operating costs with variable engine control.

MORE PRODUCTIVE

- Start work quicker with industry leading elevation time. (* 50% faster compared with previous model. Actual timings may vary.)

Carry more tools and materials and be able to work longer with 250 kg basket weight capacity.

MORE ACCESS

- Increase your work envelope with more horizontal reach. (*Compared with previous model.)

SMART DESIGN

- Reduce maintenance with DuraTough turntable hood. High impact resistance and protects components.

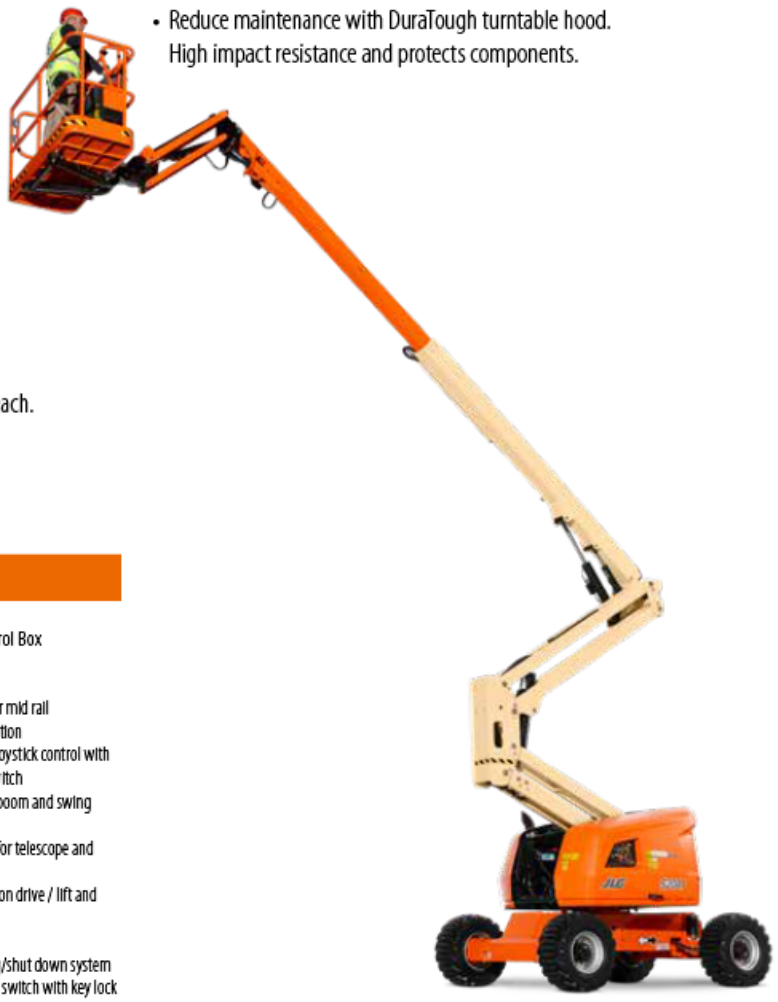

Standard Features

- 1.24 m Articulating Jib
- 0.76 m x 1.83 m Platform Side Entry
- 180 Degree Powered Platform Rotator
- Platform Console Machine Status Light Panel*
- AC power cable to Platform
- 5 Degree Tilt Alarm/Indicator Light
- Swing Out Engine Tray
- Dura Tough gull-wing turntable hoods
- 12V-DC Auxiliary Power
- Hourmeter
- Interactive Display at Ground Controls
- Control ADE® Advanced Design Electronics System
- Lifting/Tie Down Lugs
- Horn
- Hydrostatic drive transmission
- Oscillating Front Axle
- Cast Aluminum Control Box
- Motion Alarm
- Platform Tool Tray
- Side entry with drop bar mid rail
- Multiple function operation
- Full proportional drive joystick control with integral thumb steer switch
- Full proportional main boom and swing joystick control
- Multiple speed control for telescope and platform rotate
- Selectable creep speed on drive / lift and swing functions
- Load sensing system
- Engine distress warning/shut down system
- Ground control selector switch with key lock
- JLG Skyguard active system
- Low fuel engine cut-out

* Provides indicator lights at platform control console for system distress, low fuel, 5 degree tilt light, and foot switch status.

Standard Specifications

Power Source	
• Diesel Engine	Deutz D2.3 L3 Stage IIIA 36.4 kW
• Fuel Tank Capacity	60.5 L
Hydraulic System	
• System Capacity	144 L
• Tank Capacity	136 L
• Auxiliary Power	12V-DC
Tyres	
• Standard	33/1550 x 16.5 Foam Filled tyres

[1] Includes boom wipers, cylinder bellows and console cover.

Note: Some options may increase lead time, and some option combinations may not be available.

Accessories & Options

- 0.76 m x 1.22 m slide bar side entry platform
- 0.76 m x 1.22 m Self closing inward swing gate
- 0.76 m x 1.52 m slide bar side entry platform
- 13 mm airline to platform
- Flashing Amber Beacon
- Hostile Environment Kit [1]
- Light Package
- Platform Worklights
- Skypower 7,500W generator package
- PipeRack
- Catalytic exhaust purifier
- On-board 4,000W generator
- Spark arresting muffler
- Skyguard beacon (ILOS)
- Tow package
- Cold weather package
- Generator hourmeter
- Hydraulic Oil Cooler
- Synthetic Biodegradable Hydraulic Oil
- All motion alarm
- Head & Tail Lights
- Euro Plug & Socket
- Special paint colour
- Foam filled 315/55 D20 Tyres
- Non Mark FF 315/55 D20 Tyres
- 33 x 12-20 Solid Non-Marking Tyres
- Container transport wheels 33/1150 x 16.5

Disclaimer: Specifications are indicative only and may vary between model years or individual units. For equipment hire, we will supply the same or an equivalent model that is fit for the disclosed purpose.

520AJ BOOM LIFT

52FT DIESEL BOOM LIFT ARTICULATED ROUGH TERRAIN WHEELED

Performance

• Working Height	18 m
• Working Outreach	10.65 m
• Up and Over Height	7.3 m
• Swing	355 Degrees Non-Continuous
• Platform Capacity	250 kg
• Platform Size	0.76 x 1.83 m
• Platform Rotator	180 Degrees Hydraulic
• Dimensions:	
A. Platform Size	0.76 m x 1.83 m
B. Overall Width	2.35 m
C. Tailswing (working condition)	Zero
D. Stowed Height	2.27 m
E. Stowed Length	7.77 m
F. Wheelbase	2.36 m
G. Ground Clearance	0.42 m
• Jib	1.24 m
• Range of Articulation	144 Degrees (+76, -69)
• Weight [1/2]	7,985 kg
• Max Ground Bearing Pressure [2]	6.6 kg/cm²
• Drive Speed	6.8 km/hr
• Gradeability	45%
• Axle Oscillation	10 cm
• Turning Radius	
Inside	2.06 m
Outside	4.78 m

[1] Certain options or country standards may increase weight and/or dimensions

[2] With Standard tires



Reach Diagram

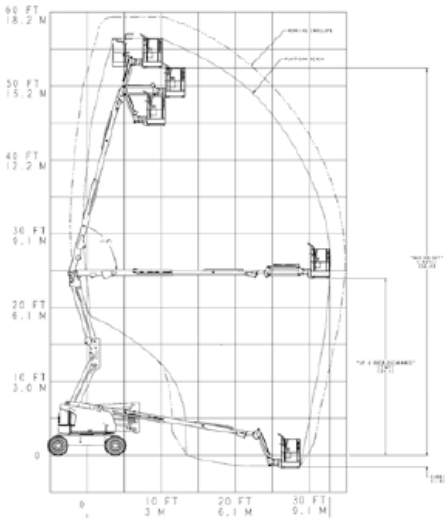

Dimensions

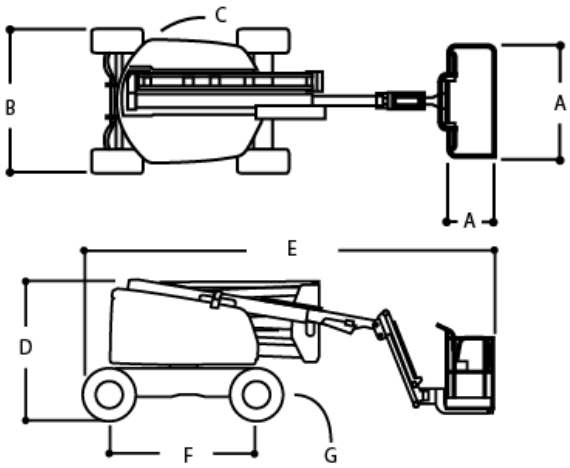

Disclaimer: Specifications are indicative only and may vary between model years or individual units. For equipment hire, we will supply the same or an equivalent model that is fit for the disclosed purpose.