GH5.6 MATERIAL LIFT

18FT COMPRESSED AIR MATERIAL LIFT

MODEL	GH™-3.8		GH-5.6	
Measurements	**Metric**	**US**	**Metric**	**US**
Height - stowed	1.04 m	3 ft 5 in	1.37 m	4 ft 6 in
A - lifting height	3.80 m	12 ft 5.6 in	5.60 m	18 ft 4.5 in
B Length - platform	0.48 m	1 ft 7 in	0.48 m	1 ft 7 in
C Width - platform	0.61 m	2 ft	0.61 m	2 ft
D - base (corner to corner)	1.35 m	4 ft 5 in	1.35 m	4 ft 5 inn
Productivity				
Load capacity	136 kg	300 lbs	113 kg	250 lbs
Storage/transport dimensions	0.36 x 0.36 x 1.00 m	14 x 14 x 39.5 in	0.36 x 0.36 x 1.00 m	14 x 14 x 39.5 in
Power				
Recommended PSI	5.86 bar	85 psi	5.86 bar	85 psi
Weight*				
	34 kg	75 lbs	37 kg	82 lbs

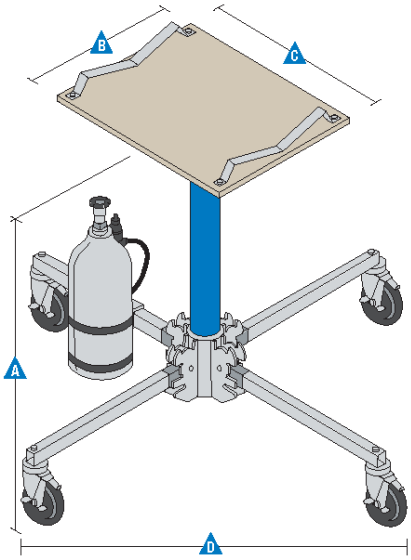

* Weight will vary depending on options and/or country standards.

Disclaimer: Specifications are indicative only and may vary between model years or individual units. For equipment hire, we will supply the same or an equivalent model that is fit for the disclosed purpose.