ACCESS HIRE AUSTRALIA

HIRE | SALES | SERVICE | LEASE | TRANSPORT

BT22RT BOOM LIFT

67FT DIESEL BOOM LIFT TELESCOPIC ROUGH TERRAIN WHEELED

Size	Metric	British
Max. Working Height	22.51m	73ft 10in
Max. Platform Height	20.51m	67ft 4in
Max. Operating Range(+0.6m)	17.28m	56ft 8in
Max. Platform Range	16.68m	54ft 9in
Overall Length(Stowed) Ⓐ	10.16m	33ft 4in
Overall Length(Transport)	10.36m	34ft
Overall Width(Stowed) Ⓑ	2.50m	8ft 2in
Overall Width(Transport)	2.28m	7ft 6in
Overall Height(Stowed) Ⓒ	2.65m	8ft 8in
Overall Height(Transport)	2.46m	8ft 1in
Platform Size(Length×Width)	2.44m×0.91m	8ft×3ft
Turntable Tailswing	1.19m	3ft 11in
Ground Clearance Ⓓ	0.28m	11in
Wheelbase Ⓔ	2.40m	7ft 10in
Turning Radius(Inside/Outside)	1.65/2.62m	5ft 5in/8ft 7in
Tyres	315/55D20	315/55D20

Performance		
S.W.L	454kg	1000lb
Max. Occupants	3	3
Gradeability	45%	45%
Travel Speed(Stowed)	6.0km/h	3.7mph
Travel Speed(Raised)	1.1km/h	0.7mph
Max. Working Slope	X-5°/Y-5°	X-5°/Y-5°
Turret Rotation	360°Continuous	360°Continuous
Platform Rotation	180°	180°
Jib Movement	135°	135°

Weight		
Overall Weight	13000kg	28660lb

Power		
Diesel Engine	Deutz D2.9 L4 / 36.4kW	Deutz D2.9 L4 / 36.4kW
Emergency Power System	12V	12V
Driving Motor	135L	35gal
Hydraulic Tank	165L	43gal

ENGINE

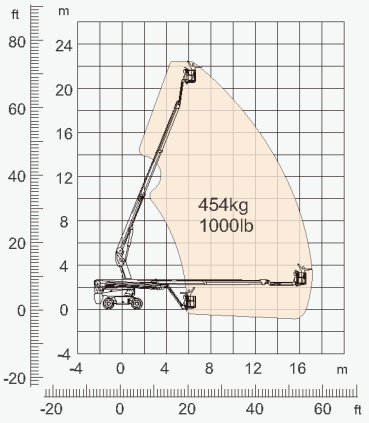

Range Of Motion

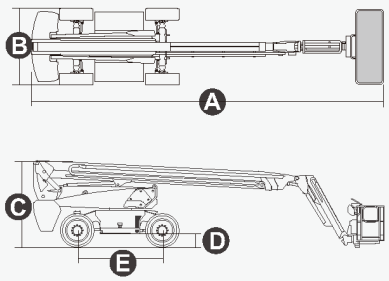



WA | NT | QLD | NSW | VIC | SA

accesshire.net

13 4000

Disclaimer: Specifications are indicative only and may vary between model years or individual units. For equipment hire, we will supply the same or an equivalent model that is fit for the disclosed purpose.