P27.6 TELEHANDLER

2.7T DIESEL TELEHANDLER INDUSTRIAL (6.0M)

PERFORMANCE AND FEATURES	P27.6AU		
PERFORMANCE			
Total unladen weight (kg)	4850		
Maximum capacity (kg)	2500		
Lifting height (m)	5,9		
Maximum reach (m)	3,3		
Maximum operating height (m)	4,5		
Maximum operating reach (m)	1,2		
Capacity at maximum height (kg)	1500		
Capacity at maximum reach (kg)	900		
Lateral boom movement (mm)	-		
Tilting correction (%)	-		
Boom sections	2		
POWERTRAIN			
Turbo motor	Kubota V3307		
Displacement/cylinders	3300/4		
Engine Power (kW/HP)	55,4/75		
Anti-pollution technology	EURO III		
Reversible fan	-		
Maximum speed (km/h)	40		
Fuel tank (l)	70		
AdBlue tank (l)	-		
Hydrostatic transmission	● - 1V		
EPD	-		
Axles	Axial		
Reduction hub	Epicyclic		
Machine brakes	Dry discs		
Automatic parking brake	●		
HYDRAULIC			
Hydraulic pump	Gear		
Flow rate/pressure (l/min – bar)	94-210		
Hydraulic tank	70		
Hydraulic outlet at the top of the boom	●		
Rear hydraulic outlets	○		
CAB			
Cab configuration	ECO		
MCDC	●		
FOPS LIV II cab	●		
ROPS cab	●		
Cab commands	Electromechanical joystick		
Tilting Cab	-		
Reverse shuttle	Finger touch		
CONFIGURATION			
Cab suspension	-		
Boom suspension	○		
Suspension on axles	-		
Work headlights on cab	○		
Sun blind	○		
Tac-lock	●		
Provision for a platform	○		
Two floating forks	●		
Inching-Control	●		
Four-wheel drive	●		
Four-wheel steering	●		
Three steering modes	●		
Standard tyres	12,0/75-18"		
Optional tyres	-		
Stabilisers	-		
Turret rotation	-		
Type approval as an agricultural tractor	-		
Approval with PNEUMATIC braking	-		
Approval with HYDRAULIC braking	-		
PTO	-		
3-point linkage	-		
DIMENSION			
Width (mm)	1840		
Height (mm)	2000		
Length (mm)	3910		
Wheelbase (mm)	2450		

- Not Available. ● standard. ○ optional.

Disclaimer: Specifications are indicative only and may vary between model years or individual units. For equipment hire, we will supply the same or an equivalent model that is fit for the disclosed purpose.

P27.6 TELEHANDLER

2.7T DIESEL TELEHANDLER INDUSTRIAL (6.0M)

LOAD CHARTS

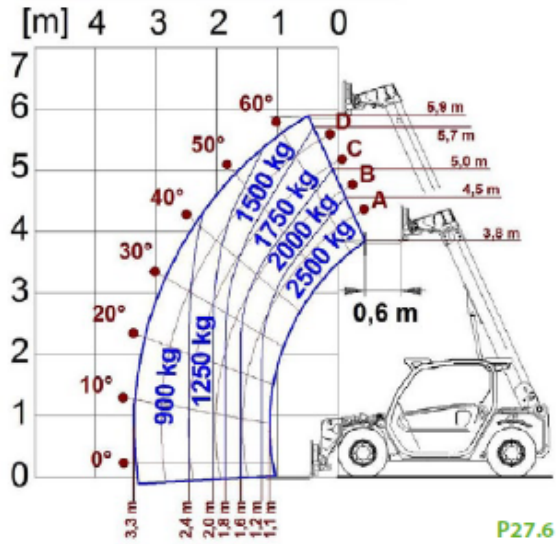

P27.6

GLOSSAR

SCR	**Selective Catalyst Reduction,** solution used for the reduction of NOx in the exhaust gases through the injection of a liquid - UREA (AdBlue) - into the exhaust gases.
DPF	**Diesel Particulate Filter,** a solution used to reduce fine particle emissions in exhaust gases
DOC	**Diesel Oxidation Catalyst,** a solution used to reduce carbon monoxide (CO) and hydrocarbons in exhaust gases
EGR	**Exhaust Gas Recirculation,** a solution used to reduce NOx in exhaust gases by recirculating gas inside the combustion chamber of the engine.
1-2V	1 or 2 speed **Merlo gearbox**
CVTronic	**Continuous variation Merlo gearbox,** for constant acceleration without loss of torque
EPD	**Eco Power Drive**, Merlo electronically-controlled hydrostatic transmission Electronic, enables effective RPM management in order to reduce overall fuel consumption by the machine
EPD Plus	In addition to the **EPD** Control, it is also possible to work using Speed Control (maintaining a constant travel speed) and Heavy Load (management of RPM in order to maximise performance for tasks such as: bucketing operations, heavy duty unloading, etc.)
EPD Top	In addition to the **EPD Plus** control function, this enables the RPM to be managed directly using the joystick
Gear	**Fixed displacement pump with gears,** combined with an open centre hydraulic distributor
LS	Variable displacement pump with **Load Sensing** control, combined with a closed centre hydraulic distributor
LS+FS	Variable displacement pump with **Load Sensing** control, combined with a closed centre hydraulic distributor equipped with solenoid valves and **Flow Sharing** control.
Kabine ECO/PREMIUM	**MODULAR** type cabin with simplified or PREMIUM equipment
MCDC	Merlo Dynamic Load Control, electronic control of the machine's anti-overturn system. • **Light:** Simplified version; • **Complete**: Version with display in cab.
FOPS	Falling object protective structure, the system which shields the operator from heavy objects falling onto the cab. Two levels: • **FOPS Liv I:** Object with a weight of 45 kg falling from 3 metres • **FOPS Liv II:** Object with a weight of 227 kg falling from 5.2 metres
ROPS	**Roll-over protection system** (or roll-over protection structure), the system that protects the operator if the vehicle rolls over
Finger Touch	Driving direction inversion system mounted on the steering column
Dual Reverse	Dual driving direction inversion system, on both the steering column and the joystick
Tac-lock	Hydraulic attachment clamping system controlled from the cab

Disclaimer: Specifications are indicative only and may vary between model years or individual units. For equipment hire, we will supply the same or an equivalent model that is fit for the disclosed purpose.