1850SJ BOOM LIFT

185FT DIESEL BOOM LIFT TELESCOPIC

Performance

Platform Height	56.56 m
Horizontal Outreach	24.38 m
Below Ground Reach	1.47 m
Swing	360° Continuous
Platform Capacity-Restricted	450 kg
Platform Capacity-Unrestricted	230 kg
Platform Rotator	173° Hydraulic
Jib Length	3.96–6.1 m
Jib Range of Articulation	120° (+75, -45)
Weight[1]	27,352 kg
Max. Ground Bearing Pressure	8.41 kg/cm²
Drive Speed	4.5 km/h
Gradeability	40%
Turning Radius (Inside)	
Axles Retracted	7.12 m
Axles Extended	2.3 m
Turning Radius (Outside)	
Axles Retracted	9.52 m
Axles Extended	6.6 m

1. Certain options or country standards increase weight.

Standard Specifications

Power Source

Diesel Engine		
Deutz TD 3.6L	99.8 hp	74.4 kW
Fuel Tank Capacity	200 L	

Hydraulic System

• Hydraulic Tank Capacity	284.2 L

Tyres

• Standard	445/50D710 24 ply Foam-Filled

Standard Features

- Platform 0.91 m x 2.44 m
- Inward Self Closing Swing Gate
- Selectable Capacity Envelope
- Drive-Out Extendable Axles
- 180° Hydraulic Platform Rotator
- AC Receptacle in Platform
- Tilt Light and Alarm
- Swing-Out Engine Tray
- 12V-DC Auxiliary Power
- Hourmeter
- Control ADE® System
- Full-Time 4WD
- 3 Selectable Steering Modes
- Proportional Controls
- Gull-Wing Steel Hoods
- 445/50D710 Foam-Filled Rim Protector Lug Tread Tyres
- Platform Console Machine Status Light Panel*
- Lifting/Tie Down Lugs
- Engine Distress Warning/Shutdown—Selectable via JLG Analyzer
- All Motion Alarm
- Glow Plugs
- LCD Panel at Operator's Platform Contol Console
- Flashing Amber Beacon
- 5.5kVA Generator
- Cylinder Bellows
- Tool Tray

* Provides indicator lights at platform control console for system distress, fuel level, low fuel, 5 degree tilt light, and foot switch status.



- **Heightened Productivity**—The 1850SJ is much faster to full height, so operators can spend more time working and less time positioning the boom. The axles take approximately one minute to extend or retract. They're able to pivot in and out and do not telescope like extendable axles on other Ultra Series boom lifts.
- **Greater Work Envelope**—Telescoping jib and five section boom provides over 82 thousand cubic metres of work area and greater ability to reach up and over. An LCD screen shows operators where they are in the work envelope along with other useful information.
- **More Capacity**—Featuring dual 450 kg/230 kg capacity, the 1850SJ is the most powerful boom in the industry. Plus, the operator can move just the jib, rather than the whole boom, for greater maneuverability and more precise positioning.

Accessories & Options

- .91 x 1.83 m Platform Entry
- Mesh to Mid Rail
- Light Package[1]
- Soft Touch System
- Cold Weather Start Kit[2]
- Hostile Environment Kit[3]
- Cold Package Plus[4]
- Special Hydraulic Oils
- Console Cover
- Container Storage Tray
- ClearSky
- SkyGuard
- Pipe Rack
- Accessory Packages:
  - SkyWelder® Package[2]
  - Nite Bright® Package[2]
  - SkyGlazier®

1. Includes platform mounted work lights and drive/backup lights.
2. Includes battery heater and oil tank heater.
3. Includes console cover, boom wipers and cylinder bellows.
4. Includes extreme cold engine oil, fuel conditioner, engine block heater, battery blanket, glow plugs, hydraulic tank heater, and oversized footswitch. Arctic hydraulic oil priced separately.

Disclaimer: Specifications are indicative only and may vary between model years or individual units. For equipment hire, we will supply the same or an equivalent model that is fit for the disclosed purpose.

1850SJ BOOM LIFT

185FT DIESEL BOOM LIFT TELESCOPIC

Dimensions

All dimensions are approximate.

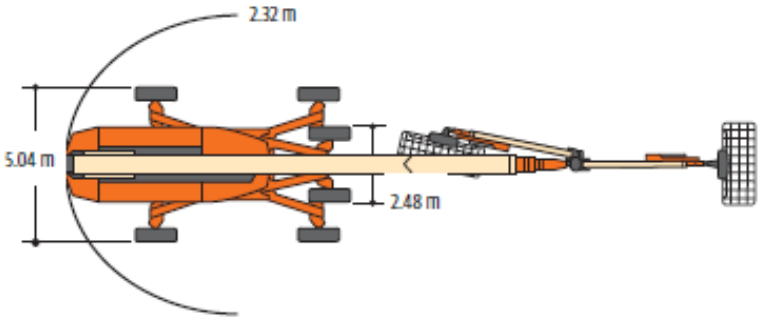

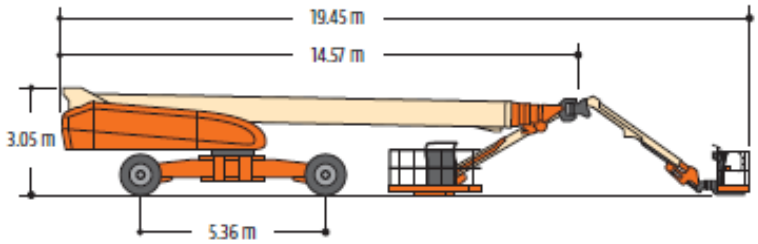

Load Chart

1850SJ

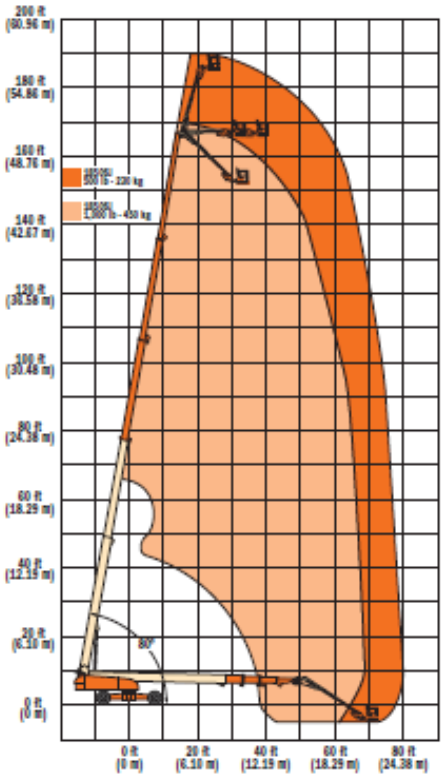

Disclaimer: Specifications are indicative only and may vary between model years or individual units. For equipment hire, we will supply the same or an equivalent model that is fit for the disclosed purpose.