P72.10EE TELEHANDLER

7.2T DIESEL TELEHANDLER INDUSTRIAL (10.0M)

PERFORMANCE AND FEATURES	P72.10 EE
PERFORMANCE	
Total unladen weight (kg)	11300
Maximum capacity (kg)	7200
Lifting height (m)	9,2
Maximum reach (m)	5,2
Maximum operating height (m)	6
Maximum operating reach (m)	1,5
Capacity at maximum height (kg)	2750
Capacity at maximum reach (kg)	1800
Lateral boom movement (mm)	± 250
Tilting correction (%)	± 8
Boom sections	2
POWERTRAIN	
Turbo motor	Kubota V3800
Displacement/cylinders	3800/4
Engine Power (kW/HP)	74/100
Anti-pollution technology	TIER 3, STAGE IIIA
Reversible fan	-
Maximum speed (km/h)	40
Fuel tank (l)	140
AdBlue tank (l)	-
Hydrostatic transmission	● - 2V
EPD	-
Axles	Drop portal
Reduction hub	RR700
Machine brakes	Dry discs
Automatic parking brake	●
HYDRAULIC	
Hydraulic pump	LS
Flow rate/pressure (l/min – bar)	104 - 250
Hydraulic tank	100
Hydraulic outlet at the top of the boom	●
Rear hydraulic outlets	○
CAB	
Cab configuration	ECO
ASCS	Complet
FOPS LIV II cab	●
ROPS cab	●
Cab commands	Electronic joystick
Tilting Cab	-
Reverse shuttle	Dual reverse
CONFIGURATION	
Cab suspension	-
Boom suspension	-
Suspension on axles	-
Work headlights on cab	●
Sun blind	●
Tac-lock	●
Provision for a platform	○
Two floating forks	●
Inching-Control	●
Four-wheel drive	●
Four-wheel steering	●
Three steering modes	●
Standard tyres	400/70-24
Optional tyres	-
Stabilisers	-
Turret rotation	-
Type approval as an agricultural tractor	-
Approval with PNEUMATIC braking	-
Approval with HYDRAULIC braking	-
PTO	-
3-point linkage	-

- Not Available. ● standard. ○ optional.

Disclaimer: Specifications are indicative only and may vary between model years or individual units. For equipment hire, we will supply the same or an equivalent model that is fit for the disclosed purpose.

P72.10EE TELEHANDLER

7.2T DIESEL TELEHANDLER INDUSTRIAL (10.0M)

LOAD CHARTS

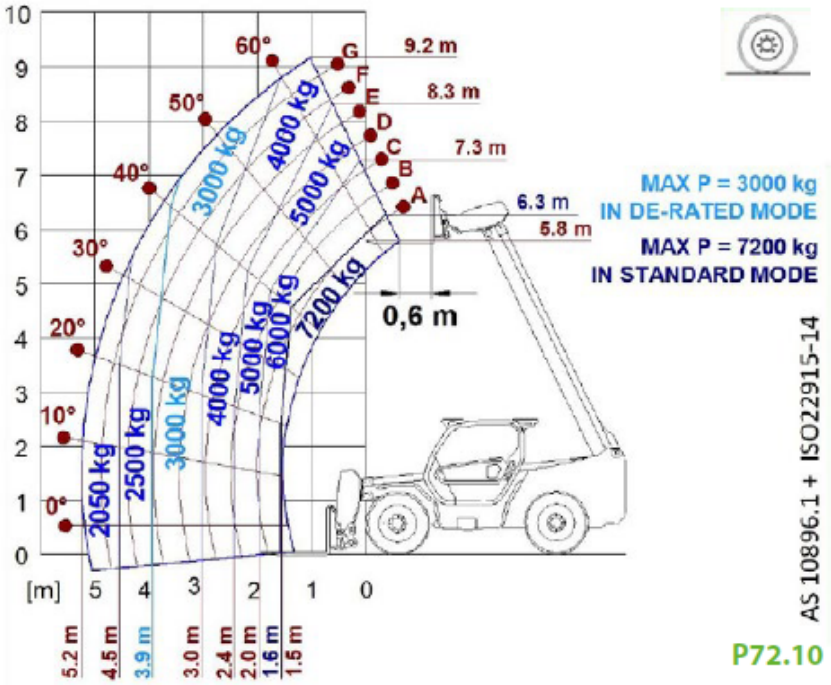

DIMENSIONS

	P72.10 EE		
A (mm)	5480		
B (mm)	1255		
C (mm)	2920		
D (mm)	1304		
E (mm)	4815		
F (mm)	450		
H (mm)	2240		
L (mm)	-		
M (mm)	1010		
P (mm)	2500		
R (mm)	3970		
S (mm)	4990		

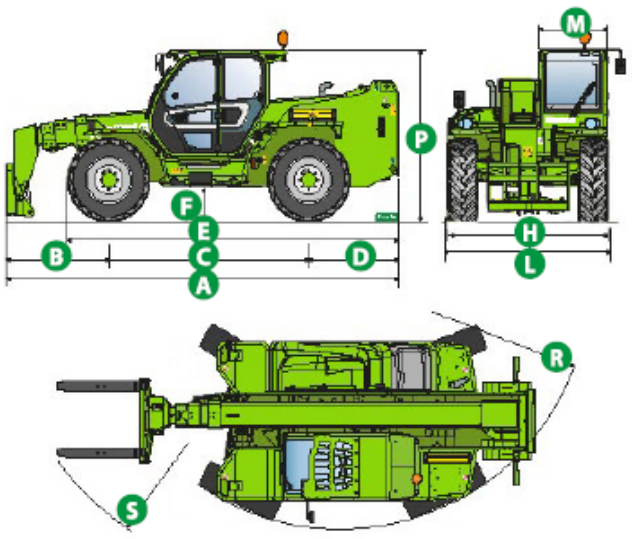

Disclaimer: Specifications are indicative only and may vary between model years or individual units. For equipment hire, we will supply the same or an equivalent model that is fit for the disclosed purpose.