STAR10 MAN LIFT

26FT ELECTRIC MAN LIFT VERTICAL MAST

Working height	10 m
Platform height	8 m
Horizontal outreach	3 m
Lift capacity - inside	200 kg (2 pers.)
Lift capacity - outside	200 kg (1 pers.)
Platform size	0.78 x 0,98 m
A Length	2.7 m
B Width	1 m
C Height - stowed	1.99 m
Tailswing	0 cm
D Wheelbase	1.2 m
E Ground clearance	10 cm
Max driveable platf. height	8 m
Drive speed proportional	0.6 - 5 km/h
Turning radius - outside	1.88 m
Turntable rotation	345 °
Vertical jib rotation	130° (+ 70 ° / - 60 °)
Tilt alarm	3 °
Gradeability	25 %
Tyres - non marking	16 x 5 x 10.5
Hydraulic system capacity	7 l
Power source	24 V - 250 Ah
Weight	2 677 kg

> Haulotte Activ'Energy Management: Smart CAN charger
> Automatic centralized battery filling
> 24 V electric drive brushless AC motors
> 24 V – 250 Ah traction batteries
> Battery charge indicator
> On-board diagnostic tool Haulotte Activ'Screen
> Forklift tine pockets
> Towing hooks and lifting eyes
> Passive potholes
> 2 steer driving wheels
> 2 front steering wheels
> Non-marking tires
> Brake release
> Hourmeter
> Horn
> Emergency stop buttons at cage and ground level
> Load controller in the platform
> Emergency hand pump
> 2 control stations at cage and ground level
> 2 rings in the platform for safety harnesses
> Drop bar entry
> Travel alarm

OPTIONS AND ACCESSORIES

> Haulotte Activ'Shield Bar
> Power line in platform
> Air line in platform
> Swing door entry gate
> Biodegradable oil
> Maintenance-free batteries
> Telematics ready
> Hydraulic oil for cold countries
> Flashing light
> Working light

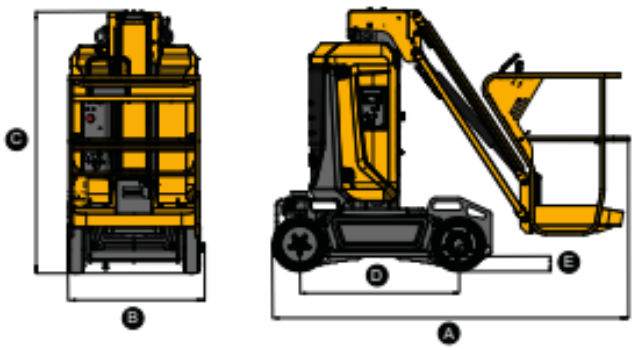

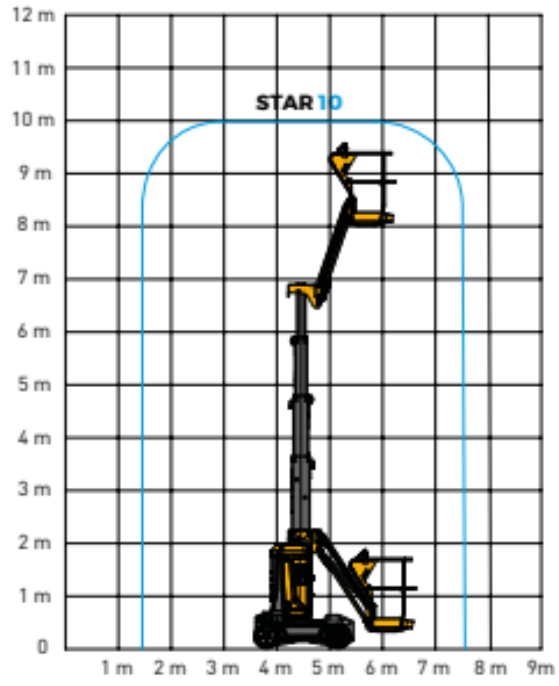

Disclaimer: Specifications are indicative only and may vary between model years or individual units. For equipment hire, we will supply the same or an equivalent model that is fit for the disclosed purpose.