S65 BOOM LIFT

65FT DIESEL BOOM LIFT TELESCOPIC

Models	S-65 / S-65 TraX	
Measurements	**Metric**	**US**
Working height maximum* (on tyres)	21.81 m	71 ft
Working height maximum* (with Trax)	21.81 m	71 ft
Platform height maximum (on tyres)	19.81 m	65 ft
Platform height maximum (with Trax)	19.80 m	65 ft
Horizontal reach maximum	17.10 m	56 ft 2 in
Below ground reach	2.72 m	8 ft 11 in
A Platform length	0.91 m	3 ft
B Platform width	2.44 m	8 ft
C Height - stowed with standard tyres	2.72 m	8 ft 11 in
- stowed with Trax	2.77 m	9 ft 1 in
D Length - stowed	9.42 m	30 ft 11 in
- transport (jib tucked under)	7.60 m	25 ft
E Width - with standard tyres	2.49 m	8 ft 2 in
- with Trax	2.59 m	8 ft 6 in
F Wheelbase	2.51 m	8 ft 3 in
G Ground clearance - centre	0.37 m	1 ft 2.5 in
- centre with Trax	0.43 m	1 ft 5 in
Productivity		
Lift capacity	227 kg	500 lbs
Platform rotation	160°	
Vertical jib rotation	135° (+78° /-57°)	
Turntable rotation	360° continuous	
Turntable tailswing (on tyres)	1.22 m	4 ft
Turntable tailswing (with Trax)	1.14 m	3 ft 9 in
Drive speed - 4WD stowed (on tyres)	4.8 km/h	3.0 mph
Drive speed - 4WD stowed (with Trax)	3.7 km/h	2.3 mph
Drive speed - raised or extended	1.1 km/h	0.68 mph
Gradeability** stowed - 4WD	45%	
Turning radius - inside	2.36 m	7 ft 9 in
- inside with Trax	3.66 m	12 ft
Turning radius - outside	5.54 m	18 ft 2 in
- outside with Trax	6.81 m	22 ft 4 in
Controls	12 V DC proportional	
Tyres - RT foam filled	355/55D 625	
Trax - track system - 4 point	Loegering QTS-R42	
Occupied Floor Pressure (with Trax)	1,210 kg/sqm	11.87 kPa
Power		
Power source - with standard tyres	Deutz D 2011 L03i 3 cylinder diesel 36 kW (48 hp)	
- with Trax	Deutz TD2011 L04i 4 cylinder turbo diesel 55 kW (74 hp)	
Auxiliary power unit	12 V DC	
Hydraulic tank capacity	170 L	45 gal
Fuel tank capacity	132 L	35 gal
Sound & Vibration Levels		
Sound pressure level (ground workstation)	83 dBA	
Sound pressure level (platform workstation)	79 dBA	
Vibration	<2.5 m/s²	<8 ft 2 in/s²
Weight* **		
4WD (standard tyres)	10,174 kg	22,429 lbs
4 WD (with Trax)	12,519 kg	27,600 lbs
Standards Compliance	AS 1418.10	

Range of Motion S-65 / S-65 TraX

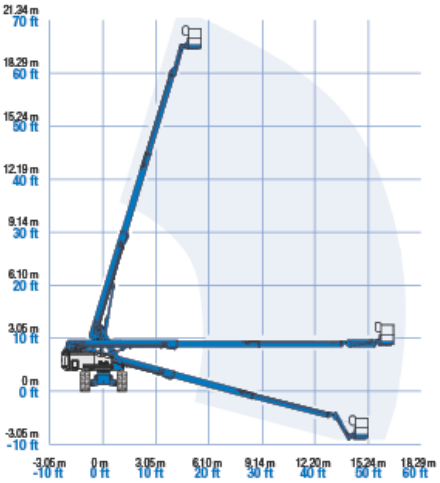

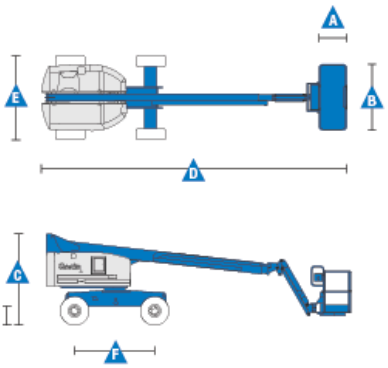

* The metric equivalent of working height adds 2 m to platform height. U.S. adds 6 ft to platform height.
** Gradeability applies to driving on slopes, see operator's manual for details regarding slope ratings.
*** Weight will vary depending on options and/or country standards.

Disclaimer: Specifications are indicative only and may vary between model years or individual units. For equipment hire, we will supply the same or an equivalent model that is fit for the disclosed purpose.