TZ50 BOOM LIFT

50FT DIESEL BOOM LIFT ARTICULATED TRAILER MOUNTED

Models	TZ-34/20		TZ-50	
Measurements	**US**	**METRIC**	**US**	**METRIC**
Working height max. - (1)	40 ft	12.19 m	55 ft 6 in	16.92 m
Platform height	34 ft	10.36 m	49 ft 6 in	15.09 m
Entry height- extended	6.4 in	0.16 m	1 ft 8 in	0.51 m
Horizontal reach	18 ft 4 in	5.59 m	29 ft 2 in	8.89 m
Clear out reach	13 ft 5 in	4.09 m	23 ft 1 in	7.04 m
Up-and-over clearance	16 ft 1 in	4.90 m	22 ft	6.71 m
A Platform length	2 ft 2.8 in	0.68 m	2 ft 2.8 in	0.68 m
B Platform width	3 ft 8 in	1.12 m	3 ft 8 in	1.12 m
C Height - stowed	6 ft 4.5 in	1.94 m	6 ft 10 in	2.08 m
D Length- stowed	18 ft 0.5 in	5.50 m	23 ft 6 in	7.16 m
E Width- stowed	4 ft 9.1 in	1.45 m	5 ft 6 in	1.68 m
F Ground clearance	9.5 in	0.24 m	10 in	0.25 m
G Length-outrigger footprint	10 ft 8.4 in	3.26 m	14 ft 4 in	4.37 m
H Width-outrigger footprint	11 ft 9.4 in	3.59 m	14 ft 4 in	4.37 m
Productivity				
Lift capacity (ANSI, CSA)- standard	500 lb	227 kg	500 lb	227 kg
Lift capacity (ANSI, CSA) - rotating platform	460 lb	209 lb	500 lb	227 kg
Lift capacity (CE/AUS) - standard	440 lb	200 kg	440 lb	200 kg
Lift capacity (CE/AUS) - rotating platform	400 lb	181 kg	440 lb	200 kg
Platform rotation - mechanical	90°		-	
Platform rotation - hydraulic	-		160°	
Turntable rotation	359°	359°	359°	359°
Outrigger leveling capability	11°		11°	
Towing speed rate	60 mph	97 km/h	60 mph	97 km/h
Tongue weight - ANSI, CSA	315 lb	143 kg	400 lb	181 kg
Tongue weight - CE	163 lb	74 kg	220 lb	100 kg
Tire size - ANSI, CSA	ST 205/75 R15		ST 225/75 R15	
Tire size - CE	185R-14C		215 R14C	
Power				
Power source- standard	24V (4×6V 225Ah)		24V (4×6V 225Ah)	
Hydraulic tank capacity	2.65 gal	10 L	4.75 gal	18 L
Hydraulic system capacity	4.5 gal	17 L	8.0 gal	30 L
Weight(3)				
Weight- ANSI, CSA, Australia	3,155 lb	1,431 kg	4,400 lb	1,996 kg
Weight- CE	3,170 lb	1,438 kg	4,475 lb	2,030 kg
Sound and Vibration Levels				
Sound Pressure level (ground workstation)	<70 dBA		<70 dBA	
Sound Pressure level (platform workstation)	<70 dBA		<70 dBA	
Vibrations	<2.5 m/s²		<2.5 m/s²	

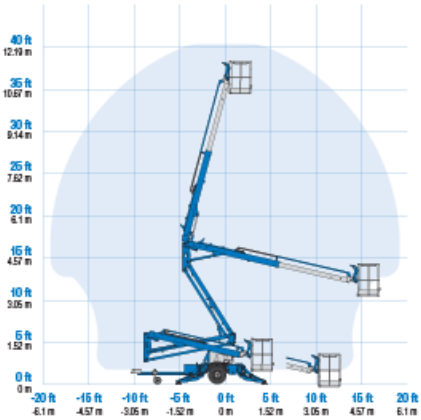

Range of motion TZ-50

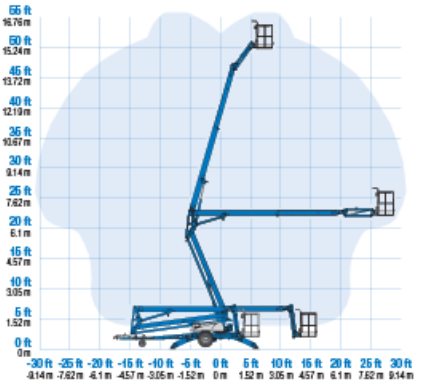

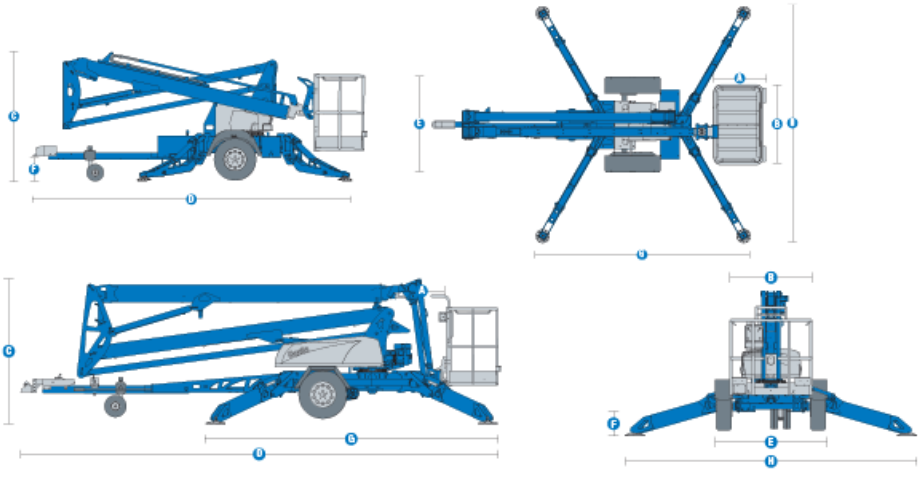

Disclaimer: Specifications are indicative only and may vary between model years or individual units. For equipment hire, we will supply the same or an equivalent model that is fit for the disclosed purpose.