BA12RT BOOM LIFT

34FT DIESEL BOOM LIFT ARTICULATED ROUGH TERRAIN WHEELED

Dimension	Metric	British
Max. Working Height	12.54m	41' 2"
Max. Platform Height	10.54m	34' 7"
Max. Horizontal Reach	6.70m	22'
Max. Up And Over Clearance	4.80m	15' 9"
Turntable Tailswing	0m	0"
Overall Length A	5.75m	18' 10"
Overall Length(Transport)	4.12m	13' 6"
Overall Width B	1.85m	6' 1"
Overall Height C	2.02m	6' 7"
Overall Height(Transport)	2.10m	6' 11"
Platform Size(Length ×Width)	1.42×0.76m	4' 8"×2' 6"
★Larger Platform Size(Length ×Width)	1.80×0.76m	5' 11"×2' 6"
Ground Clearance D	0.17m	7"
Wheelbase E	1.88m	6' 2"
Turning Radius(Inside/Outside)	1.80/4.10m	5' 11"/13' 5"
Tyres	16.5-10	16.5-10

Performance		
S.W.L	272kg	600lb
★Larger Platform Size S.W.L	227kg	500lb
Max. Occupants(Indoor/Outdoor)	2/2	2/2
Gradeability	45%	45%
Turret Rotation	355°Discontinuity	355°Discontinuity
Platform Rotation	180°	180°
Jib Movement	+74°/-65°	+74°/-65°
Travel Speed(Stowed)	≯4.8km/h	≯2.98mph
Travel Speed(Raised)	≯0.8km/h	≯0.49mph
Max. Working Slope(X/Y)	3°/4.5°	3°/4.5°

Weight		
Overall Weight	5400kg	11905lb

Power		
Diesel Engine	D1105 18.2kW/3000rpm	D1105 18.2kW/3000rpm
Diesel Tank	40L	10gal
Hydraulic Tank	75L	19gal
Emergency Power System	12VDC	12VDC

ENGINE

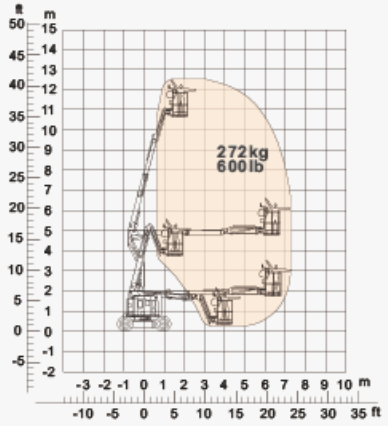

Range Of Motion

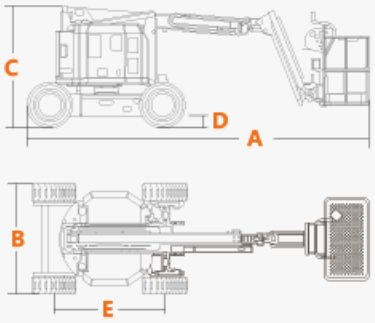



Disclaimer: Specifications are indicative only and may vary between model years or individual units. For equipment hire, we will supply the same or an equivalent model that is fit for the disclosed purpose.