X26JP-D BOOM LIFT

77FT DIESEL BOOM LIFT SPIDER

Performance

Working Height	25.60 m
Platform Height	23.60 m
Working Outreach	13.75 m
Up & Over Height	10.10 m
Swing (Non-continuous)	360°
Jib - Overall Length	1.68 m
Jib - Range of Articulation (+/-)	89° (+0/-89°)
Platform Capacity (Unrestricted)	230 kg
Platform Size	0.69 m x 1.34 m
Basket Rotation	124° (+/- 62°)
Stowed Width (With Platform)	1.34 m
Width of Undercarriage (Retracted/Extended)	0.99 m / 1.49 m
Machine Weight[1]	4,550 kg
Ground Bearing Pressure on Outriggers	4.51 kg/cm^2
Gradeability	28%
Maximum Operating Slope	16°
Max. Approach / Depart Angles	Front 22° / Rear 17°

[1] Certain options or country standards may increase weight and/or dimensions.



Standard Specifications

Power Source

Bi-Energy

- Kubota D902 16.1 kw (21.6cHP) Diesel T4F (Stage 5) Engine
- 100 Ah / 83V Electric engine with Lithium battery package including battery charger

Tracks

- Non-marking rubber tracks 2.10 m x 0.23 m x 0.38 m

Standard Features

- 0.69 m x 1.34 m Aluminium 2 person platform
- SkyGuard
- Slide bar rear entry
- Footswitch
- Full proportional control
- Articulating jib
- Remote Control (via cable to platform)
- Full Remote Control of drive and stabilization
- Multi-lingual LCD display on platform console
- Platform console position sensor and lock
- Envelope management load sensing system
- Platform designed for ease of removal/ changeover
- Engine protection
- Rubber Outrigger Pads
- Cylinder Rod Protection on Outriggers
- Automatic cut-out when out of level
- Powered track extensions/'retraction
- Turntable alignment sensor and gauge
- Emergency descent systems
- Electro-hydraulic controls
- Full pressure hydraulic controls
- Lifting/Tie down points
- Forklift pockets
- AS/NZS 1418.10 Compliance

Accessories & Options

- AC Outlet To Platform incl. ELCB
- Fire Extinguisher

Disclaimer: Specifications are indicative only and may vary between model years or individual units. For equipment hire, we will supply the same or an equivalent model that is fit for the disclosed purpose.

X26JP-D BOOM LIFT

77FT DIESEL BOOM LIFT SPIDER

Dimensions

All dimensions are approximate.

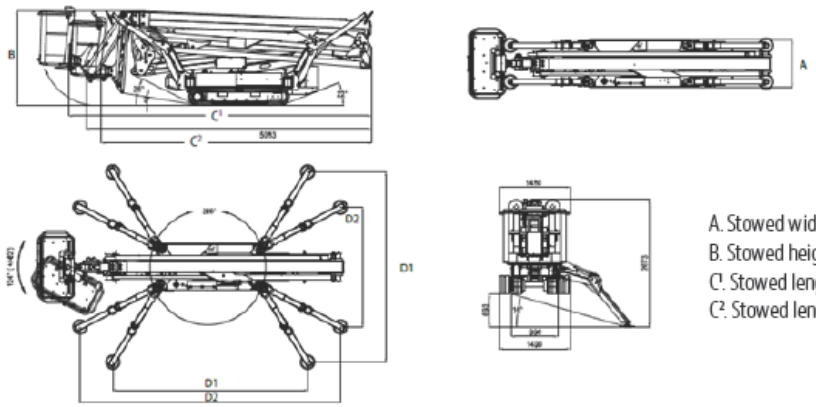

A. Stowed width (without platform) 0.99 m
B. Stowed height (on tracks) 1.99 m
C¹. Stowed length (on tracks) 6.35 m
C². Stowed length (on tracks) without Basket 5.98 m

D. Outrigger footprint
D1. Wide 4.01 m x 3.98 m
D2. Narrow 5.4 m x 2.5 m

Reach Diagram

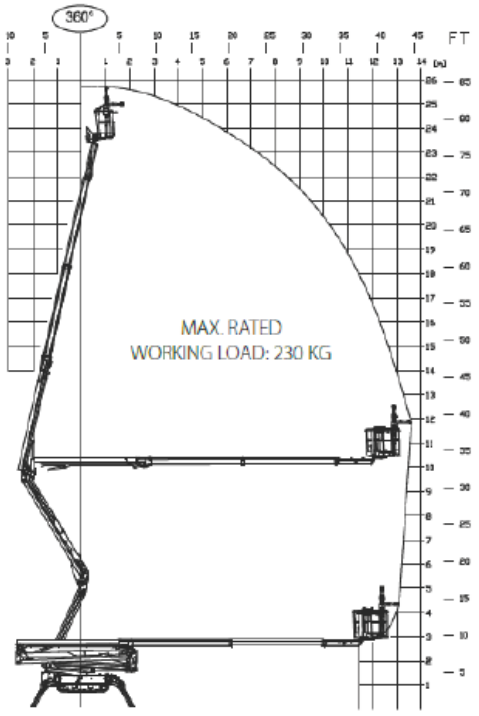

Disclaimer: Specifications are indicative only and may vary between model years or individual units. For equipment hire, we will supply the same or an equivalent model that is fit for the disclosed purpose.