450AJ-BMA BOOM LIFT

45FT DIESEL BOOM LIFT ARTICULATED

Performance

Platform Height	45 ft	13.72 m
Horizontal Outreach		
450A	30 ft	9.14 m
450AJ	25 ft	7.62 m
Up and Over Height	24 ft	7.3 m
Swing	355 Degrees Non-Continuous	
Platform Capacity		
Unrestricted	550 lb	250 kg
Platform Size	30 x 72 in.	0.76 x 1.83 m
Platform Rotator	180 Degrees Hydraulic	
Jib	4 ft 1 in.	1.24 m
Range of Articulation	145 Degrees (+76, -69)	
Weight		
450A	15,850 lb	7,190 kg
450AJ	14,150 lb	6,418 kg
Max Ground Bearing Pressure	65 psi	4.57 kg/cm²
Drive Speed	4.25 mph	6.84 km/hr
Gradeability		
2WD	30%	
4WD	45%	
Tilt Cut Out	5 Degrees	
Axle Oscillation	4 in.	10 cm
Turning Radius		
Inside	6 ft 9 in.	2.06 m
Outside	15 ft 8 in.	4.78 m

Standard Specifications

Power Source

Dual Fuel Engine		
Kubota WG2503	61 hp	45.5 kW
Diesel Engine		
Deutz D2.9 L4 Tier 4 Final	49 hp	36.4 kW
Fuel Tank Capacity	16 gal.	60.6 L

Hydraulic System

System Capacity	38 gal.	143.8 L
Tank Capacity	36 gal.	136.27 L
Auxiliary Power	12V-DC	

Tires

Standard	33/1550 x 16.5 Foam Filled Lug Tread
Optional	Non Marking Foam Filled Tires



Standard Features

- 4 ft 1 in. (1.24 m) Articulating Jib
- Platform 30 x 72 in. (0.76 x 1.83 m) Side Entry
- 180 Degree Hydraulic Platform Rotator
- Platform Console Machine Status Light Panel[1]
- 110V-AC Receptacle in the Platform
- 5 Degree Tilt Alarm/Indicator Light
- Swing Out Engine Module
- Improved Multi-Function Controls
- Gull-Wing Turntable Hoods
- 12V-DC Auxiliary Power
- Hourmeter
- Interactive Display at Ground Controls
- Proportional Controls
- Control ADE® System
- Lifting/Tie Down Lugs
- Horn
- Four-Wheel Hydrostatic Drive
- Oscillating Axle
- Cast Aluminum Control Box
- Motion Alarm
- Reduced Time to Full Height
- Load Sensing System
- SkyGuard SkyLine™

Accessories & Options

- 30 x 60 in. (0.76 x 1.25 m) Platform
- Inward Self-Closing Swing
- 36 x 72 in. (0.91 x 1.83 m) Platform
- Fall Arrest Platform 30 x 60 in. (.76 x 1.53 m)
- 1/2 in. Air Line to Platform
- SkySense™
- Soft Touch System
- AC Generator
- Flashing Amber Beacon
- 43.5 lb (19.73 kg) Propane Tank
- Cold Weather Kit[2]
- Hostile Environment Kit[3]
- Arctic Package[4]
- Light Package[5]
- Operator Tool Tray
- Accessory Packages
  - SkyPower® Package
  - SkyWelder® Package

Disclaimer: Specifications are indicative only and may vary between model years or individual units. For equipment hire, we will supply the same or an equivalent model that is fit for the disclosed purpose.

450AJ-BMA BOOM LIFT

45FT DIESEL BOOM LIFT ARTICULATED

Dimensions

All dimensions are approximate.

450A

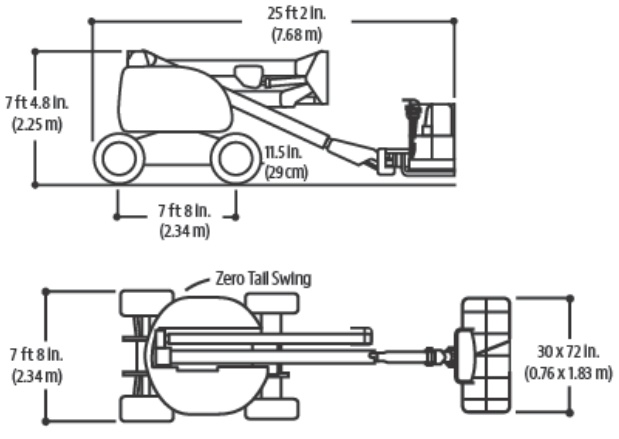

450AJ

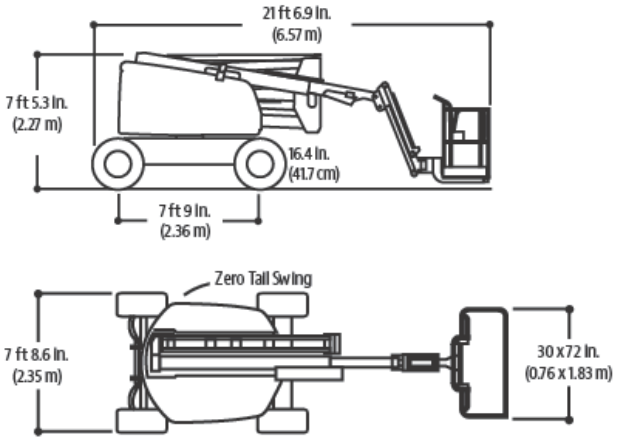

Reach Diagrams

450A

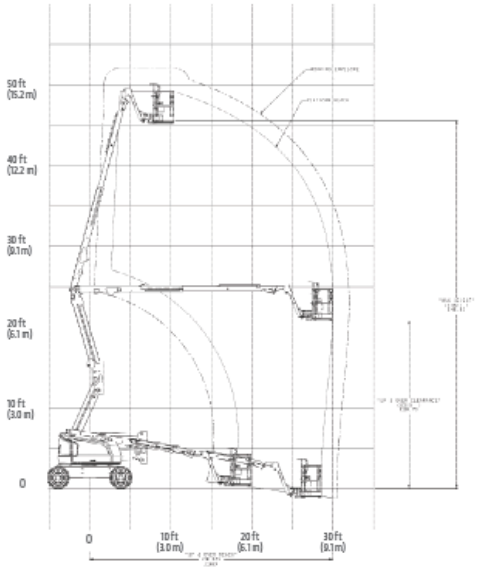

450AJ

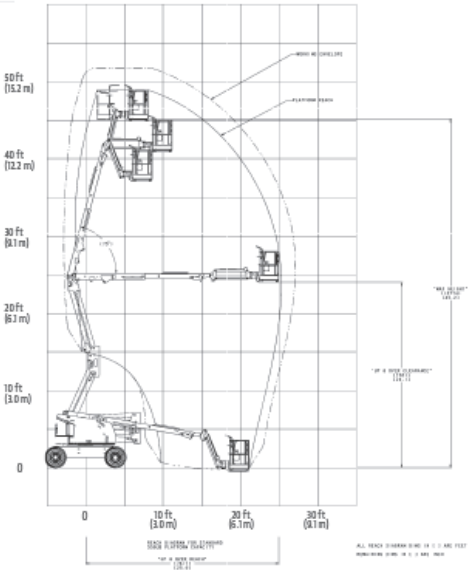

Disclaimer: Specifications are indicative only and may vary between model years or individual units. For equipment hire, we will supply the same or an equivalent model that is fit for the disclosed purpose.