600AJ-BMA BOOM LIFT

60FT DIESEL BOOM LIFT ARTICULATED

Performance

Platform Height	60 ft 7 in.	18.47 m
Horizontal Outreach	39 ft 9 in.	12.10 m
Up and Over Clearance	26 ft 7 in.	8.1 m
Swing	360 Degrees Continuous	
Platform Capacity	500 lb	227 kg
Platform Rotator	180 Degrees Hydraulic	
Jib Range of Articulation	130 Degrees (+70, –60)	
Weight		
600AJ	22,691 lb	10,292 kg
600AJ Narrow	24,200 lb	10,977 kg
Max. Ground Bearing Pressure		
600AJ	75 psi	5.25 kg/cm2
600AJ Narrow	94 psi	6.6 kg/cm2
Drive Speed 2WD	4.25 mph	6.8 kph
Drive Speed 4WD	4.25 mph	6.8 kph
Gradeability 2WD	30%	
Gradeability 4WD	45%	
Tilt Cut Out	4 Degrees	
Axle Oscillation	8 in. 0.2 m	
Turning Radius Inside/Outside		
2WS	10 ft. 11 in./17 ft. 7in.	3.33 m/5.36 m
4WS	5 ft. 6 in./11 ft. 8 in.	1.68 m/3.56 m
Narrow Models		
4WS	5 ft. 7 in./11 ft. 2 in.	1.7 m/3.4 m

Standard Specifications

Power Source

Dual Fuel Engine		
Ford MSG425	84 hp	62 kw
Diesel Engine		
Deutz D2.9L4 Tier 4 Final	49 hp	36.4 kw
Fuel Tank Capacity	30 gal.	113.6 L

Hydraulic System

• Capacity	30.6 gal.	115.8 L
• Auxiliary Power	12V DC	

Tires

• Standard	IN355/55D-6.25 Foam Filled
• Narrow Models	36x14-20 Solid Tires

Standard Features

- Oscillating Axle
- 180 Degree Hydraulic Platform Rotator
- 110V-AC Receptacle in the Platform
- 4 Degree Tilt Alarm/Indicator Light
- Swing-Out Engine Tray
- 12V-DC Auxiliary Power
- Hourmeter
- Horn
- Control ADE® System
- Proportional Controls
- Gull-Wing Engine Hood
- Platform Console Machine
- Status Light Panel*
- Lifting/Tie Down Lugs
- All Motion Alarm
- Glow Plugs (Diesel Engines)
- Load Sensing System
- SkyGuard SkyLine™



Accessories & Options

- Platform: 36 x 72 in. (0.91 x 1.83 m)
- Fall Arrest Platform, Rear Entry: 36 x 96 in. (0.91 x 2.44 m)
- Self-Closing Gate
- SkySense™
- Soft Touch System
- Operator Tool Tray
- 43.5 lb (19.7 kg) Propane Tank
- Cold Weather Start Kit[1]
- Hostile Environment Kit[2]
- Light Package[3]
- Flashing Amber Beacon
- Arctic Package[4]
- Accessory Packages:
  - -- SkyPower®
  - -- SkyWelder®

* Provides indicator lights at platform control console for system distress, 5 degree tilt light, and foot switch status.

1. Includes glow plugs (Diesel), battery heater, oil tank heater.
2. Includes console cover, boom wipers and cylinder bellows.
3. Includes head and tail lights, platform worklights and beacon.
4. Includes arctic hydraulic hoses (drive and steer only) and main boom cable, arctic hydraulic oil, extreme cold engine oil, fuel conditioner, engine block heater, battery blanket, glow plugs, hydraulic tank heater, and oversized footswitch.

Note: Some options may increase lead time, and some option combinations may not be available.

Additional accessories and options available via JLG Aftermarket.

Disclaimer: Specifications are indicative only and may vary between model years or individual units. For equipment hire, we will supply the same or an equivalent model that is fit for the disclosed purpose.

600AJ-BMA BOOM LIFT

60FT DIESEL BOOM LIFT ARTICULATED

Dimensions

All dimensions are approximate.

600AJ

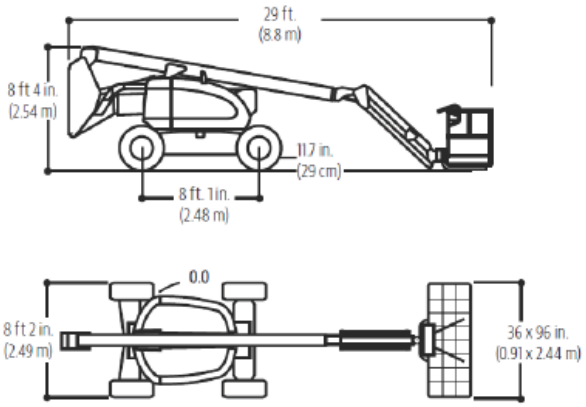

Reach Diagram

600AJ

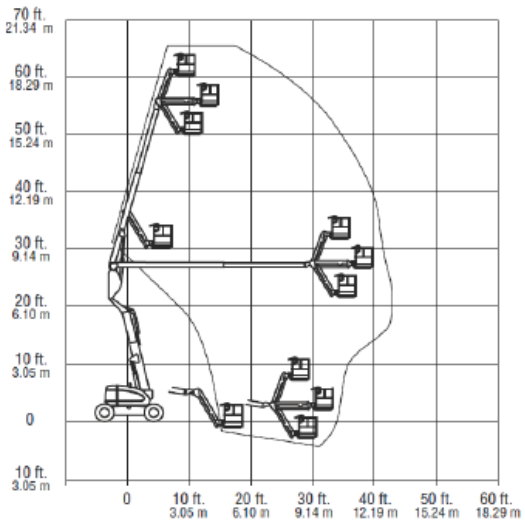

Disclaimer: Specifications are indicative only and may vary between model years or individual units. For equipment hire, we will supply the same or an equivalent model that is fit for the disclosed purpose.